Mathematical Inequalities & Applications

Zagreb, Croatia Volume 19, Number 4, October 2016

UDC 51 ISSN 1331-4343

Mathematical Inequalities & Applications

Volume 19, Number 4 (2016) 1141–1440

ZAGREB, 2016.

CONTENTS

Selected papers

MATHEMATICAL INEQUALITIES AND APPLICATIONS 2015

Mostar, Bosnia and Herzegovina

November 11–15, 2015

Conference on the occasion of 60th birthdays of
Professors Neven Elezović, Marko Matić and Ivan Perić

Special editors

Kazimierz Nikodem
Constantin P. Niculescu
Sanja Varošanec

Mathematical
Inequalities
& Applications
Volume 19, Number 4 (2016), 1141–1158 doi:10.7153/mia-19-84

CHARACTERIZATION OF THE HARDY PROPERTY OF MEANS AND THE BEST HARDY CONSTANTS

ZSOLT PÁLES AND PAWEŁ PASTECZKA

Dedicated to the 60th birthdays of Professors
Neven Elezović, Marko Matić and Ivan Perić

(*Communicated by S. Varošanec*)

Abstract. The aim of this paper is to characterize in broad classes of means the so-called Hardy means, i.e., those means $M\colon \bigcup_{n=1}^{\infty}\mathbb{R}_+^n \to \mathbb{R}_+$ that satisfy the inequality

$$\sum_{n=1}^{\infty} M(x_1,\dots,x_n) \leqslant C\sum_{n=1}^{\infty} x_n$$

for all positive sequences (x_n) with some finite positive constant C. One of the main results offers a characterization of Hardy means in the class of symmetric, increasing, Jensen concave and repetition invariant means and also a formula for the best constant C satisfying the above inequality.

1. Introduction

Hardy's celebrated inequality (cf. [23], [24]) states that, for $p>1$,

$$\sum_{n=1}^{\infty}\left(\frac{x_1+\cdots+x_n}{n}\right)^p \leqslant \left(\frac{p}{p-1}\right)^p \sum_{n=1}^{\infty} x_n^p, \tag{1.1}$$

for all nonnegative sequences (x_n).

This inequality, in integral form was stated and proved in [23] but it was also pointed out that this discrete form follows from the integral version. Hardy's original motivation was to get a simple proof of Hilbert's celebrated inequality. About the enormous literature concerning the history, generalizations and extensions of this inequality, we recommend four recent books [30], [31], [44], and [46] for the interested readers.

In this paper, we follow the approach in generalizing Hardy's inequality of the paper [62]. The main idea is to rewrite (1.1) in terms of means.

Mathematics subject classification (2010): 26D15.
Keywords and phrases: Mean, Hardy mean, Hardy constant, Hardy inequality, quasi-arithmetic mean, Kedlaya mean, Gini mean, Gaussian product of means.
The research of the first author was supported by the Hungarian Scientific Research Fund (OTKA) Grant K-111651.

Paper MIA-19-84

First, replacing x_n by $x_n^{1/p}$ and p by $1/p$, we get that

$$\sum_{n=1}^{\infty}\left(\frac{x_1^p+\cdots+x_n^p}{n}\right)^{1/p} \leqslant \left(\frac{1}{1-p}\right)^{1/p}\sum_{n=1}^{\infty} x_n \tag{1.2}$$

for $0<p<1$. This inequality was also established for $p<0$ by Knopp [28]. Taking the limit $p\to 0$, the so-called Carleman inequality (cf. [10]) can also be derived:

$$\sum_{n=1}^{\infty}\sqrt[n]{x_1\cdots x_n} \leqslant e\sum_{n=1}^{\infty} x_n. \tag{1.3}$$

It is also important to note that the constants of the right hand sides of the above inequalities are the smallest possible. For further developments and historical remarks concerning inequality (1.3), we refer to the paper Pečarić–Stolarsky [49].

Now define for $p\in\mathbb{R}$ the pth power (or Hölder) mean of the positive numbers $x_1,\dots,x_n$ by

$$\mathcal{P}_p(x_1,\dots,x_n) := \begin{cases} \left(\dfrac{x_1^p+\cdots+x_n^p}{n}\right)^{\frac{1}{p}} & \text{if } p\neq 0,\\ \sqrt[n]{x_1\cdots x_n} & \text{if } p=0. \end{cases} \tag{1.4}$$

The power mean $\mathcal{P}_1$ is the arithmetic mean which will also be denoted by $\mathcal{A}$ in the sequel.

Observe that all of the above inequalities are particular cases of the following one

$$\sum_{n=1}^{\infty} M(x_1,\dots,x_n) \leqslant C\sum_{n=1}^{\infty} x_n, \tag{1.5}$$

where M is a mean on $\mathbb{R}_+$, that is, M is a real valued function defined on the set $\bigcup_{n=1}^{\infty}\mathbb{R}_+^n$ such that, for all $n\in\mathbb{N}$, $x_1,\dots,x_n>0$,

$$\min(x_1,\dots,x_n) \leqslant M(x_1,\dots,x_n) \leqslant \max(x_1,\dots,x_n).$$

In the sequel, a mean M will be called a *Hardy mean* if there exists a positive real constant C such that (1.5) holds for all positive sequences $x=(x_n)$. The smallest possible extended real value C such that (1.5) is valid will be called the *Hardy constant of* M and denoted by $\mathcal{H}_\infty(M)$. Due to the Hardy, Carleman, and Knopp inequalities, the pth power mean is a Hardy mean if $p<1$. One can easily see that the arithmetic mean is not a Hardy mean, therefore the following result holds.

THEOREM 1.1. *Let $p\in\mathbb{R}$. Then, the power mean $\mathcal{P}_p$ is a Hardy mean if and only if $p<1$. In addition, for $p<1$,*

$$\mathcal{H}_\infty(\mathcal{P}_p) = \begin{cases} (1-p)^{-\frac{1}{p}} & \text{if } p\neq 0,\\ e & \text{if } p=0. \end{cases}$$

The notion of power means is generalized by the concept of *quasi-arithmetic means* (cf. [24]): If $I \subseteq \mathbb{R}$ is an interval and $f : I \to \mathbb{R}$ is a continuous strictly monotonic function then the quasi-arithmetic mean $\mathcal{M}_f : \bigcup_{n=1}^{\infty} I^n \to \mathbb{R}$ is defined by

$$\mathcal{M}_f(x_1,\dots,x_n) := f^{-1}\left(\frac{f(x_1)+\cdots+f(x_n)}{n}\right), \qquad x_1,\dots,x_n \in I. \tag{1.6}$$

By taking f as a power function or a logarithmic function on $I = \mathbb{R}_+$, the resulting quasi-arithmetic mean is a power mean. It is well-known that *Hölder means are the only homogeneous quasi-arithmetic means* (cf. [24], [61], [48]).

The following result which completely characterizes the Hardy means among quasi-arithmetic means is due to Mulholland [45].

THEOREM 1.2. *Let $f : \mathbb{R}_+ \to \mathbb{R}$ be a continuous strictly monotonic function. Then, the quasi-arithmetic mean $\mathcal{M}_f$ is a Hardy mean if and only if there exist constants $p < 1$ and $C > 0$ such that, for all $n \in \mathbb{N}$ and $x_1,\dots,x_n > 0$,*

$$\mathcal{M}_f(x_1,\dots,x_n) \leqslant C\mathcal{P}_p(x_1,\dots,x_n).$$

In 1938 Gini introduced another extension of power means: For $p,q \in \mathbb{R}$, the *Gini mean* $\mathcal{G}_{p,q}$ of the variables $x_1,\dots,x_n > 0$ is defined as follows:

$$\mathcal{G}_{p,q}(x_1,\dots,x_n) := \begin{cases} \left(\dfrac{x_1^p+\cdots+x_n^p}{x_1^q+\cdots+x_n^q}\right)^{\frac{1}{p-q}} & \text{if } p \neq q, \\ \exp\left(\dfrac{x_1^p\ln(x_1)+\cdots+x_n^p\ln(x_n)}{x_1^p+\cdots+x_n^p}\right) & \text{if } p = q. \end{cases} \tag{1.7}$$

Clearly, in the particular case $q = 0$, the mean $\mathcal{G}_{p,q}$ reduces to the pth Hölder mean $\mathcal{P}_p$. It is also obvious that $\mathcal{G}_{p,q} = \mathcal{G}_{q,p}$. A common generalization of quasi-arithmetic means and Gini means can be obtained in terms of two arbitrary real functions. These means were introduced by Bajraktarević [2], [3] in 1958. Let $I \subseteq \mathbb{R}$ be an interval and let $f,g : I \to \mathbb{R}$ be continuous functions such that g is positive and f/g is strictly monotone. Define the *Bajraktarević mean* $\mathcal{B}_{f,g} : \bigcup_{n=1}^{\infty} I^n \to \mathbb{R}$ by

$$\mathcal{B}_{f,g}(x_1,\dots,x_n) := \left(\frac{f}{g}\right)^{-1}\left(\frac{f(x_1)+\cdots+f(x_n)}{g(x_1)+\cdots+g(x_n)}\right), \qquad x_1,\dots,x_n \in I.$$

One can check that $\mathcal{B}_{f,g}$ is a mean on I. In the particular case $g \equiv 1$, the mean $\mathcal{B}_{f,g}$ reduces to $\mathcal{M}_f$, that is, the class of Bajraktarević means is more general than that of the quasi-arithmetic means. By taking power functions, we can see that the Gini means also belong to this class. It is a remarkable result of Aczél and Daróczy [1] that the homogeneous means among the Bajraktarević means defined on $I = \mathbb{R}_+$ are exactly the Gini means.

Finally, we recall the concept of the most general means considered in this paper, the notion of the *deviation means* introduced by Daróczy [12] in 1972. A function $E : I \times I \to \mathbb{R}$ is called a *deviation function* on I if $E(x,x) = 0$ for all $x \in I$ and the

function $y \mapsto E(x,y)$ is continuous and strictly decreasing on I for each fixed $x \in I$. The *E-deviation mean* or *Daróczy mean* of some values $x_1,\dots,x_n \in I$ is now defined as the unique solution y of the equation

$$E(x_1,y)+\cdots+E(x_n,y)=0$$

and is denoted by $\mathcal{D}_E(x_1,\dots,x_n)$. It is immediate to see that the arithmetic deviation $A(x,y)=x-y$ generates the arithmetic mean. More generally, if $E: I\times I \to \mathbb{R}$ is of the form $E(x,y):=f(x)-g(x)\left(\frac{f}{g}\right)(y)$ for some continuous function $f,g: I\to\mathbb{R}$ such that g is positive and f/g is strictly monotone then $\mathcal{D}_E=\mathcal{B}_{f,g}$. Thus, Hölder means, quasi-arithmetic means, Gini means and Bajraktarević means are particular Daróczy means. The class of deviation means was slightly generalized to the class of quasi-deviation means and this class was completely characterized by Páles in [51].

The following result, which gives necessary and also sufficient conditions for the Hardy property of deviation means was established by Páles and Persson [62] in 2004.

THEOREM 1.3. *Let $E:\mathbb{R}_+\times\mathbb{R}_+\to\mathbb{R}$ be a deviation on $\mathbb{R}_+$. If $\mathcal{D}_E$ is a Hardy mean, then there exists a positive constant C such that*

$$\mathcal{D}_E(x_1,\dots,x_n)\leqslant C\mathcal{A}(x_1,\dots,x_n)$$

holds for all $n\in\mathbb{N}$ and $x_1,\dots,x_n>0$ and there is no positive constant C^* such that

$$C^*\mathcal{A}(x_1,\dots,x_n)\leqslant \mathcal{D}_E(x_1,\dots,x_n)$$

be valid on the same domain. Conversely, if

$$\mathcal{D}_E(x_1,\dots,x_n)\leqslant C\mathcal{P}_p(x_1,\dots,x_n)$$

is satisfied with a parameter $p<1$ and a positive constant C, then $\mathcal{D}_E$ is a Hardy mean.

As a corollary of the previous result, necessary and also sufficient conditions for the Hardy property were established in the class of Gini means in the same paper.

THEOREM 1.4. *Let $p,q\in\mathbb{R}$. If $\mathcal{G}_{p,q}$ is a Hardy mean, then*

$$\min(p,q)\leqslant 0 \qquad \textit{and} \qquad \max(p,q)\leqslant 1.$$

Conversely, if

$$\min(p,q)\leqslant 0 \qquad \textit{and} \qquad \max(p,q)< 1,$$

then $\mathcal{G}_{p,q}$ is a Hardy mean.

It has been an open problem since 2004 whether the second condition was a necessary and sufficient condition for the Hardy property and also the best Hardy constant was to be determined.

The necessary and sufficient condition for the Hardy property of Gini means was finally found by Pasteczka [47] in 2015. The key was the following general necessary condition for the Hardy property.

LEMMA 1.5. *Assume that* $M\colon \bigcup_{n=1}^{\infty}\mathbb{R}_+^n \to \mathbb{R}_+$ *is a Hardy mean. Then, for all positive non-*ℓ_1 *sequences* (x_n),

$$\liminf_{n\to\infty} x_n^{-1} M(x_1,\dots,x_n) < \infty.$$

Applying this necessary condition in the class of Gini means with the harmonic sequence $x_n := \frac{1}{n}$, Pasteczka [47] obtained the following characterization of the Hardy property for Gini means.

THEOREM 1.6. *Let* $p,q \in \mathbb{R}$. *Then* $\mathcal{G}_{p,q}$ *is a Hardy mean if and only if*

$$\min(p,q) \leqslant 0 \qquad \textit{and} \qquad \max(p,q) < 1.$$

There was no progress, however, in establishing the Hardy constant of the Gini means. There was only an upper estimate obtained by Páles and Persson in [62].

Motivated by all these preliminaries, the purpose of this paper is twofold:

— To find (in terms of easy-to-check properties) a large subclass of Hardy means.

— To obtain a formula for the Hardy constant in that subclass of means.

2. Means and their basic properties

For investigating the Hardy property of means, we recall several relevant notions. Let $I \subseteq \mathbb{R}$ be an interval and let $M\colon \bigcup_{n=1}^{\infty} I^n \to I$ be an arbitrary mean.

We say that M is *symmetric*, *(strictly) increasing*, and *Jensen convex (concave)* if, for all $n \in \mathbb{N}$, the n-variable restriction $M|_{I^n}$ is a symmetric, (strictly) increasing in each of its variables, and Jensen convex (concave) on I^n, respectively. If $I = \mathbb{R}_+$, we can analogously define the notion of homogeneity of M.

The mean M is called *repetition invariant* if, for all $n,m \in \mathbb{N}$ and $(x_1,\dots,x_n) \in I^n$, the following identity is satisfied

$$M(\underbrace{x_1,\dots,x_1}_{m\text{-times}},\dots,\underbrace{x_n,\dots,x_n}_{m\text{-times}}) = M(x_1,\dots,x_n).$$

The mean M is *strict* if for any $n \geqslant 2$ and any non-constant vector $(x_1,\dots,x_n) \in I^n$,

$$\min(x_1,\dots,x_n) < M(x_1,\dots,x_n) < \max(x_1,\dots,x_n).$$

The mean M is said to be $\min$*-diminishing* if, for any $n \geqslant 2$ and any non-nonstant vector $(x_1,\dots,x_n) \in I^n$,

$$M(x_1,\dots,x_n,\min(x_1,\dots,x_n)) < M(x_1,\dots,x_n).$$

It is easy to check that quasi-arithmetic means are symmetric, strictly increasing, repetition invariant, strict and $\min$-diminishing. More generally, deviation means are symmetric, repetition invariant, strict and $\min$-diminishing (cf. [51]). The increasingness of a deviation mean $\mathcal{D}_E$ is equivalent to the increasingness of the deviation E in its first variable. The Jensen concavity/convexity of quasi-arithmetic and also of deviation

means can be characterized by the concavity/convexity conditions on the generating functions. All these characterizations are consequences of the general results obtained in a series of papers by Losonczi [33, 34, 36, 35, 37, 38] (for Bajraktarević means) and by Daróczy [14, 11, 12, 15, 16] and Páles [50, 52, 53, 54, 55, 56, 57, 58, 59, 60] (for (quasi-)deviation means).

2.1. Kedlaya means

The notion of a Kedlaya mean that we introduce below turns out to be indispensable for the investigation of Hardy means. A mean $M\colon \bigcup_{n=1}^{\infty} I^n \to I$ is called a *Kedlaya mean* if, for all $n \in \mathbb{N}$ and $(x_1,\dots,x_n) \in I^n$,

$$\frac{M(x_1)+M(x_1,x_2)+\cdots+M(x_1,\dots,x_n)}{n} \leqslant M\left(x_1, \frac{x_1+x_2}{2}, \dots, \frac{x_1+\cdots+x_n}{n}\right). \tag{2.1}$$

The motivation for the above terminology comes from the papers [26, 27] by Kedlaya, where he proved that the geometric mean satisfies the inequality (2.1), i.e., it is a Kedlaya mean. The next result provides a sufficient condition in order that a mean be a Kedlaya mean.

THEOREM 2.1. *Every symmetric, Jensen concave and repetition invariant mean is a Kedlaya mean.*

Proof. Let $M\colon \bigcup_{n=1}^{\infty} I^n \to I$ be a symmetric, Jensen concave and repetition invariant mean. Fix $n \in \mathbb{N}$ and $(x_1,\dots,x_n) \in I^n$. Adopting Kedlaya's original proof, for $(i,j,k) \in \{1,\dots,n\}^3$, we define

$$\begin{aligned} a_k(i,j) &:= (n-1)! \cdot \binom{n-i}{j-k}\binom{i-1}{k-1} \Big/ \binom{n-1}{j-1} \\ &= \frac{(n-i)!(n-j)!(i-1)!(j-1)!}{(n-i-j+k)!(i-k)!(j-k)!(k-1)!}. \end{aligned}$$

To provide the corectness of this definition we assume that $m! = \infty$ for negative integers m (it is a natural extension of gamma function). Then, according to [26], we have the following properties:

(1) $a_k(i,j) \geqslant 0$ for all i, j, k;

(2) $a_k(i,j) \in \mathbb{N} \cup \{0\}$ for all i, j, k;

(3) $a_k(i,j) = 0$ for $k > \min(i,j)$;

(4) $a_k(i,j) = a_k(j,i)$ for all i, j, k;

(5) $\sum_{k=1}^{n} a_k(i,j) = (n-1)!$ for all i, j;

(6) $\sum_{i=1}^{n} a_k(i,j) = \begin{cases} n!/j & \text{for } k \leqslant j, \\ 0 & \text{for } k > j. \end{cases}$

Let us construct a matrix A of size $n! \times n!$ divided into n^2 blocks $(A_{i,j})_{i,j\in\{1,\dots,n\}}$ of size $(n-1)! \times (n-1)!$.

The first row of each block $A_{i,j}$ contains the number k exactly $a_k(i,j)$ times for $k \in \{1,\dots,n\}$; this could be done by (5). The subsequent rows are all cyclic permutations of the first one. In this way each row and each column of $A_{i,j}$ contains the number k exactly $a_k(i,j)$ times.

Now, let $c_p(k)$ denote the occurrence of the number k appearing in the pth row of A. Then, by (4), $c_p(k)$ is equal to the number of occurrences of k in the pth column of A.

We are going to calculate $c_p(k)$. The pth row has a nonempty intersection with the block $A_{i,j}$ if

$$i = \left\lfloor \frac{p-1}{(n-1)!} \right\rfloor + 1 =: b(p).$$

Whence, applying property (6), we get

$$c_p(k) = \sum_{i=1}^{n} a_k(i,b(p)) = \begin{cases} n!/b(p) & \text{for } k \leqslant b(p), \\ 0 & \text{for } k > b(p). \end{cases}$$

Now, let us consider the matrix A' obtained from A by replacing $k \mapsto x_k$ for $k \in \{1,\dots,n\}$. We will calculate the mean value of the elements of A' in two different ways. First, we calculate the mean M of each column of A'. By the Jensen concavity of M, the arithmetic mean of the results so obtained does not exceed the result of calculating arithmetic mean of each row of A' and then taking the M mean of the resulting vector of length $n!$. Whence, using the symmetry and the repetition invariance of M, we obtain

$$\frac{1}{n!}\Big((n-1)!M(x_1) + (n-1)!M(x_1,x_2) + \cdots + (n-1)!M(x_1,x_2,\dots,x_n)\Big) \leqslant M\Big(x_1, \frac{x_1+x_2}{2}, \dots, \frac{x_1+x_2+\cdots+x_n}{n}\Big)$$

which simplifies to the inequality (2.1) to be proved. □

COROLLARY 2.2. *If, in addition to the assumptions of Theorem 2.1, M is also increasing and $I = \mathbb{R}_+$, then*

$$M(x_1) + M(x_1,x_2) + \cdots + M(x_1,\dots,x_n) \leqslant n \cdot M\left(x_1 + \cdots + x_n, \frac{x_1+\cdots+x_n}{2}, \dots, \frac{x_1+\cdots+x_n}{n}\right).$$

2.2. Gaussian product

The Gaussian product of means is a broad extension of Gauss' idea of the arithmetic-geometric mean. In 1800 (this year is due to [64]) he proposed the following two-term recursion:

$$x_{n+1} = \frac{x_n + y_n}{2}, \quad y_{n+1} = \sqrt{x_n y_n}, \qquad n = 0,1,\dots,$$

where x_0 and y_0 are positive numbers. Gauss [20, p. 370] proved that both $(x_n)_{n=1}^{\infty}$ and $(y_n)_{n=1}^{\infty}$ converge to a common limit, which is called arithmetic-geometric mean of the initial values x_0 and y_0. J. M. Borwein and P. B. Borwein [9] extended some earlier ideas [19, 32, 63] and generalized this iteration to a vector of continuous, strict means of an arbitrary length. For several recent results about Gaussian product of means see the papers by Baják and Páles [4, 5, 6, 7], by Daróczy and Páles [13, 17, 18], by Głazowska [21, 22], by Matkowski [39, 40, 41, 42], and by Matkowski and Páles [43].

Given $N \in \mathbb{N}$ and a vector $(M_1, \dots, M_N)$ of means defined on a common interval I and having values in I (i.e. $M_i \colon \bigcup_{n=1}^{\infty} I^n \to I$ for every $i \in \{1, \dots, N\}$), let us introduce the mapping $\mathbf{M} \colon \bigcup_{n=1}^{\infty} I^n \to I^N$ by

$$\mathbf{M}(v) := (M_1(v), M_2(v), \dots, M_N(v)), \qquad v \in \bigcup_{n=1}^{\infty} I^n.$$

Whenever, for every $i \in \{1, \dots, N\}$ and every $v \in \bigcup_{n=1}^{\infty} I^n$, the limit $\lim_{k\to\infty} [\mathbf{M}^k(v)]_i$ exists and does not depend on i, then the value of this limit will be called the *Gaussian product* of $(M_1, \dots, M_N)$ evaluated at v. We will denote this limit by $M_{\otimes}(v)$. It is well-known that the Gaussian product can equivalently be defined as a unique function satisfying the following two properties:

(i) $M_{\otimes} \circ \mathbf{M}(v) = M_{\otimes}(v)$ for all $v \in \bigcup_{n=1}^{\infty} I^n$,

(ii) $\min(v) \leqslant M_{\otimes}(v) \leqslant \max(v)$ for all $v \in \bigcup_{n=1}^{\infty} I^n$.

Frequently, whenever each of the means M_i, $i \in \{1, \dots, N\}$ has a certain property, then $M_{\otimes}$ inherits this property. The lemma below (in view of Theorem 2.1) is its very useful exemplification.

LEMMA 2.3. *Let I be an interval, $N \in \mathbb{N}$, and let $(M_1, \dots, M_N) \colon \bigcup_{n=1}^{\infty} I^n \to I^N$. If, for each $i \in \{1, \dots, N\}$, M_i is symmetric/homogeneous/repetition invariant/increasing and Jensen concave/convex, then so is their Gaussian product $M_{\otimes}$.*

Proof. The first four properties are naturally inherited by all of the functions $[\mathbf{M}^k]_i$, for $k \in \mathbb{N}$, $i \in \{1, \dots, N\}$ and, finally, by their pointwise limit. The verification of the statement about the Jensen concavity is just a little bit more sophisticated. In fact, the idea presented below could also be adapted to the remaining properties.

Assume that $M_1, \dots, M_N$ are increasing and Jensen concave. We will prove that $M_{\otimes}$ is Jensen concave. Let $x^{(0)}$, $y^{(0)}$ be the equidimensional vectors and $m^{(0)} = \frac{1}{2}(x^{(0)} + y^{(0)})$. Let

$$x^{(k+1)} = \mathbf{M}(x^{(k)}), \quad y^{(k+1)} = \mathbf{M}(y^{(k)}), \quad m^{(k+1)} = \mathbf{M}(m^{(k)}), \qquad k \in \mathbb{N}.$$

We are going to prove that

$$[m^{(k)}]_i \geqslant \tfrac{1}{2}[x^{(k)} + y^{(k)}]_i \quad \text{for any } i \in \{1, \dots, N\} \text{ and } k \in \mathbb{N}. \tag{2.2}$$

Obviously, this holds for $k=0$. Let us assume that (2.2) holds for some $k\in\mathbb{N}$ and any i. Then, by the increasingness and Jensen concavity of M_i,

$$\begin{aligned}[m^{(k+1)}]_i = M_i(m^{(k)}) &\geqslant M_i\left(\tfrac{1}{2}(x^{(k)}+y^{(k)})\right) \geqslant \tfrac{1}{2}\left(M_i(x^{(k)})+M_i(y^{(k)})\right)\\ &= \tfrac{1}{2}\left([x^{(k+1)}]_i+[y^{(k+1)}]_i\right) = \tfrac{1}{2}[x^{(k+1)}+y^{(k+1)}]_i.\end{aligned}$$

Upon taking the limit $k\to\infty$, one gets

$$M_\otimes\left(\frac{x^{(0)}+y^{(0)}}{2}\right) = M_\otimes(m^{(0)}) \geqslant \tfrac{1}{2}\left(M_\otimes(x^{(0)})+M_\otimes(y^{(0)})\right),$$

which proves that $M_\otimes$ is Jensen concave, indeed. $\square$

3. Main Results

In the sequel, let $I\subseteq\mathbb{R}$ be a nondegenerate interval such that $\inf I=0$. We will denote by $\ell_1(I)$ the collection of all sequences $x=(x_n)_{n=1}^\infty$ such that, for all $n\in\mathbb{N}$, $x_n\in I$ and $\|x\|_1:=\sum_{n=1}^\infty x_n$ is convergent, i.e., $x\in\ell_1$.

Recall (slightly extending the definition) that, for a given mean $M\colon \bigcup_{n=1}^\infty I^n\to I$, the constant $\mathcal{H}_\infty(M)$ is the smallest nonnegative extended real number, called the *Hardy constant of* M, such that

$$\sum_{n=1}^\infty M(x_1,\dots,x_n)\leqslant \mathcal{H}_\infty(M)\sum_{n=1}^\infty x_n,\qquad (x_n)_{n=1}^\infty\in\ell_1(I). \tag{3.1}$$

If $\mathcal{H}_\infty(M)$ is finite, then we say that M is a *Hardy mean*. Given also $n\in\mathbb{N}$, we define $\mathcal{H}_n(M)$ to be the smallest nonnegative number such that

$$M(x_1)+\ldots+M(x_1,\dots,x_n)\leqslant \mathcal{H}_n(M)(x_1+\cdots+x_n),\qquad (x_1,\dots,x_n)\in I^n. \tag{3.2}$$

Due to the mean value property of M, for $n\in\mathbb{N}$, we easily obtain that $1\leqslant\mathcal{H}_n(M)\leqslant n$. The sequence $\big(\mathcal{H}_n(M)\big)_{n=1}^\infty$ will be called the *Hardy sequence of* M.

Several estimates of the Hardy sequences for power means were given during the years. For example Kaluza and Szegő [25] proved $\mathcal{H}_n(\mathcal{P}_p)\leqslant \frac{1}{n(\exp(1/n)-1)}\cdot\mathcal{H}_\infty(\mathcal{P}_p)$ for $p\in[0,1)$ and $n\in\mathbb{N}$. Moreover it is known [24, p.267] that $\mathcal{H}_n(\mathcal{P}_0)\leqslant(1+\frac{1}{n})^n$ for all $n\in\mathbb{N}$.

The basic properties of the Hardy sequence are established in the following

PROPOSITION 3.1. *For every mean $M\colon \bigcup_{n=1}^\infty I^n\to I$, its Hardy sequence is nondecreasing and*

$$\lim_{n\to\infty}\mathcal{H}_n(M)=\mathcal{H}_\infty(M). \tag{3.3}$$

Proof. To verify the nondecreasingness of the Hardy sequence of M, let $(x_1,\dots,x_n)$ in I^n and $\varepsilon\in I$ be arbitrary. Applying inequality (3.2) to the sequence $(x_1,\dots,x_n,\varepsilon)\in I^{n+1}$, we obtain

$$\begin{aligned}M(x_1)+\cdots+M(x_1,\dots,x_n) &\leqslant M(x_1)+\cdots+M(x_1,\dots,x_n)+M(x_1,\dots,x_n,\varepsilon)\\ &\leqslant \mathcal{H}_{n+1}(M)(x_1+\cdots+x_n+\varepsilon).\end{aligned}$$

Upon taking the limit $\varepsilon \to 0$, it follows that

$$M(x_1)+\cdots+M(x_1,\dots,x_n) \leqslant \mathcal{H}_{n+1}(M)(x_1+\cdots+x_n)$$

for all $(x_1,\dots,x_n) \in I^n$. Hence $\mathcal{H}_n(M) \leqslant \mathcal{H}_{n+1}(M)$.

To prove (3.3), we will show first that $\mathcal{H}_n(M) \leqslant \mathcal{H}_\infty(M)$ for all $n \in \mathbb{N}$. If $\mathcal{H}_\infty(M) = \infty$ then this inequality is obvious, hence we may assume that M is a Hardy mean. Fix $n \in \mathbb{N}$ and $(x_1,\dots,x_n) \in I^n$ and choose $\varepsilon \in I$ arbitrarily. Applying (3.1) to the sequence $(x_1,\dots,x_n,\frac{\varepsilon}{2},\frac{\varepsilon}{4},\frac{\varepsilon}{8},\dots) \in \ell_1(I)$, one gets

$$\begin{aligned}
&M(x_1)+\cdots+M(x_1,\dots,x_n)\\
&\qquad \leqslant M(x_1)+\cdots+M(x_1,\dots,x_n)+M(x_1,\dots,x_n,\tfrac{\varepsilon}{2})+M(x_1,\dots,x_n,\tfrac{\varepsilon}{2},\tfrac{\varepsilon}{4})+\cdots\\
&\qquad \leqslant \mathcal{H}_\infty(M)(x_1+\cdots+x_n+\tfrac{\varepsilon}{2}+\tfrac{\varepsilon}{4}+\cdots)\\
&\qquad = \mathcal{H}_\infty(M)(x_1+\cdots+x_n+\varepsilon).
\end{aligned}$$

Upon passing the limit $\varepsilon \to 0$, we get

$$M(x_1)+\cdots+M(x_1,\dots,x_n) \leqslant \mathcal{H}_\infty(M)(x_1+\cdots+x_n),$$

which implies $\mathcal{H}_n(M) \leqslant \mathcal{H}_\infty(M)$. Using this inequality, we have also proved that in (3.3) $\leqslant$ holds instead of equality.

To prove the reversed inequality in (3.3), let $(x_n)_{n=1}^\infty \in \ell_1(I)$ be arbitrary. Then, for all $n \leqslant k$, we have that

$$M(x_1)+\cdots+M(x_1,\dots,x_n) \leqslant \mathcal{H}_n(M)(x_1+\cdots+x_n) \leqslant \mathcal{H}_k(M)(x_1+\cdots+x_n)$$

Now taking the limit as $k \to \infty$, we obtain that

$$M(x_1)+\cdots+M(x_1,\dots,x_n) \leqslant \lim_{k\to\infty} \mathcal{H}_k(M)\cdot(x_1+\cdots+x_n)$$

holds for all $n \in \mathbb{N}$. Finally taking the limit as $n \to \infty$, it follows that M satisfies

$$\sum_{n=1}^\infty M(x_1,\dots,x_n) \leqslant \lim_{k\to\infty} \mathcal{H}_k(M) \sum_{n=1}^\infty x_n$$

which yields that the reversed inequality in (3.3) is also true. $\square$

In what follows, we show that the inequality (3.1) is strict in a broad class of means.

PROPOSITION 3.2. *Let $I \subseteq \mathbb{R}_+$ and $M\colon \bigcup_{n=1}^\infty I^n \to I$. If M is a* min*-diminishing, increasing and repetition invariant Hardy mean, then*

$$\sum_{n=1}^\infty M(x_1,\dots,x_n) < \mathcal{H}_\infty(M) \sum_{n=1}^\infty x_n, \qquad (x_n)_{n=1}^\infty \in \ell_1(I).$$

Proof. Let $x=(x_n)_{n=1}^{\infty}\in\ell_1(I)$ be arbitrary. If $x_l<x_k$ for some $l<k$ then, for the sequence

$$x'_n=\begin{cases} x_n & n\notin\{k,l\},\\ x_k & n=l,\\ x_l & n=k,\end{cases}$$

we have

$$\begin{aligned} M(x_1,\dots,x_n)&=M(x'_1,\dots,x'_n) && \text{for } n<l \text{ or } n\geqslant k,\\ M(x_1,\dots,x_n)&\leqslant M(x'_1,\dots,x'_n) && \text{for } n\in\{l,\dots,k-1\}.\end{aligned}$$

Therefore

$$M(x_1)+\dots+M(x_1,\dots,x_n)+\dots\leqslant M(x'_1)+\dots+M(x'_1,\dots,x'_n)+\dots.$$

Whence we may assume that x is non-increasing.

Let $\hat{x}=(x_1,x_1,\dots,x_n,x_n,\dots)$. Then, by the repetition invariance and the min-diminishing property of M, we get

$$\begin{aligned} M(x_1,\dots,x_n)&=M(\hat{x}_1,\dots,\hat{x}_{2n}),\\ M(x_1,\dots,x_n)&=M(\hat{x}_1,\dots,\hat{x}_{2n-1}) && \text{if } x_1=x_n,\\ M(x_1,\dots,x_n)&<M(\hat{x}_1,\dots,\hat{x}_{2n-1}) && \text{if } x_1\neq x_n.\end{aligned}$$

Since $x_n\to 0$ as $n\to\infty$, hence $x_1\neq x_n$ holds for some n. Therefore

$$2\cdot\sum_{n=1}^{\infty}M(x_1,\dots,x_n)<\sum_{n=1}^{\infty}M(\hat{x}_1,\dots,\hat{x}_n)\leqslant\mathcal{H}_\infty(M)\sum_{n=1}^{\infty}\hat{x}_n=2\mathcal{H}_\infty(M)\sum_{n=1}^{\infty}x_n.$$

This completes the proof of the proposition. □

The next result offers a fundamental lower estimate for the Hardy constant of a mean.

THEOREM 3.3. *Let $M\colon\bigcup_{n=1}^{\infty}I^n\to I$ be a mean. Then, for all sequences $(x_n)_{n=1}^{\infty}$ in I that does not belong to ℓ_1,*

$$\liminf_{n\to\infty}x_n^{-1}M(x_1,\dots,x_n)\leqslant\mathcal{H}_\infty(M). \tag{3.4}$$

Proof. Assume, on the contrary, that

$$\mathcal{H}_\infty(M)<\liminf_{n\to\infty}x_n^{-1}M(x_1,\dots,x_n).$$

Then, there exists $\varepsilon>0$ and n_0 such that, for all $n\geqslant n_0$,

$$(1+\varepsilon)\mathcal{H}_\infty(M)x_n<M(x_1,\dots,x_n). \tag{3.5}$$

Choose $n_1>n_0$ such that

$$\sum_{n=1}^{n_0}x_n\leqslant\varepsilon\sum_{n=n_0+1}^{n_1}x_n \tag{3.6}$$

Thus, using (3.5), Proposition 3.1, and finally (3.6), we obtain

$$\sum_{n=n_0+1}^{n_1}(1+\varepsilon)\mathcal{H}_\infty(M)x_n < \sum_{n=n_0+1}^{n_1} M(x_1,\dots,x_n) \leqslant \sum_{n=1}^{n_1} M(x_1,\dots,x_n)$$
$$\leqslant \mathcal{H}_{n_1}(M)\sum_{n=1}^{n_1} x_n \leqslant \mathcal{H}_\infty(M)\sum_{n=1}^{n_1} x_n \leqslant (1+\varepsilon)\mathcal{H}_\infty(M)\sum_{n=n_0+1}^{n_1} x_n.$$

This contradiction validates (3.4). □

The main result of our paper is contained in the following theorem.

THEOREM 3.4. *Let $M\colon \bigcup_{n=1}^{\infty}\mathbb{R}_+^n \to \mathbb{R}_+$ be an increasing, symmetric, repetition invariant, and Jensen concave mean. Then*

$$\mathcal{H}_\infty(M) = \sup_{y>0}\liminf_{n\to\infty}\frac{n}{y}\cdot M\left(\frac{y}{1},\frac{y}{2},\dots,\frac{y}{n}\right). \tag{3.7}$$

As a trivial consequence of the above result, M is a Hardy mean if and only if the number $\mathcal{H}_\infty(M)$ given in (3.7) is finite.

Proof. For the proof of the theorem, denote

$$C := \sup_{y>0}\liminf_{n\to\infty}\frac{n}{y}\cdot M\left(\frac{y}{1},\frac{y}{2},\dots,\frac{y}{n}\right).$$

The inequality $\mathcal{H}_\infty(M) \geqslant C$ is simply a consequence of Theorem 3.3.

To show the reversed inequality, we may assume that C is finite. Fix $x \in \ell_1(\mathbb{R}_+)$ and denote $y := \|x\|_1$. Then there exists a sequence (n_k), $n_k \to \infty$ such that

$$n_k \cdot M\left(\frac{y}{1},\frac{y}{2},\dots,\frac{y}{n_k}\right) \leqslant (C+\tfrac{1}{k})y, \qquad k\in\mathbb{N}.$$

By the increasingness of M and by the obvious inequality $x_1+\dots+x_{n_k} \leqslant y$, the previous inequality yields

$$n_k \cdot M\left(x_1+\dots+x_{n_k}, \frac{x_1+\dots+x_{n_k}}{2},\dots,\frac{x_1+\dots+x_{n_k}}{n_k}\right) \leqslant \left(C+\tfrac{1}{k}\right)y, \qquad k\in\mathbb{N}.$$

Therefore, in view of Corollary 2.2, we obtain

$$M(x_1)+M(x_1,x_2)+\dots+M(x_1,\dots,x_{n_k}) \leqslant (C+\tfrac{1}{k})y, \qquad k\in\mathbb{N}.$$

Upon passing the limit $k\to\infty$, one gets

$$\sum_{n=1}^{\infty} M(x_1,\dots,x_n) \leqslant Cy = C\|x\|_1.$$

This completes the proof of inequality $\mathcal{H}_\infty(M) \leqslant C$. □

COROLLARY 3.5. *If, in addition to the assumptions of Theorem 3.4, M is also homogeneous, then*

$$\mathcal{H}_\infty(M) = \lim_{n\to\infty} n \cdot M\left(1, \tfrac{1}{2}, \dots, \tfrac{1}{n}\right).$$

Proof. In view of the previous theorem we only need to prove that the limit of the sequence (p_n) exists (possible infinite), where

$$p_n := n \cdot M\left(1, \tfrac{1}{2}, \dots, \tfrac{1}{n}\right).$$

For, it suffices to show that this sequence is nondecreasing. Fix $n \in \mathbb{N}$. Let us consider the two vectors u, v of dimension $n(n+1)$ defined by

$$u := (\underbrace{n, \dots, n}_{n+1}, \underbrace{\tfrac{n}{2}, \dots, \tfrac{n}{2}}_{n+1}, \dots, \underbrace{\tfrac{n}{n-1}, \dots, \tfrac{n}{n-1}}_{n+1}, \underbrace{1, \dots, 1}_{n+1});$$
$$v := (\underbrace{n+1, \dots, n+1}_{n}, \underbrace{\tfrac{n+1}{2}, \dots, \tfrac{n+1}{2}}_{n}, \dots, \underbrace{\tfrac{n+1}{n}, \dots, \tfrac{n+1}{n}}_{n}, \underbrace{1, \dots, 1}_{n}).$$

By the homogeneity and repetition invariance of M, we have that $M(u) = p_n$ and $M(v) = p_{n+1}$. Divide vectors u and v into $n+1$ parts of dimension n:

$$u^{(i)} := (\underbrace{\tfrac{n}{i}, \dots, \tfrac{n}{i}}_{i}, \underbrace{\tfrac{n}{i+1}, \dots, \tfrac{n}{i+1}}_{n-i}), \qquad i = 0, \dots, n;$$
$$v^{(i)} := (\underbrace{\tfrac{n+1}{i+1}, \dots, \tfrac{n+1}{i+1}}_{n}), \qquad i = 0, \dots, n.$$

For $i \geqslant 1$, each element $\frac{n}{i}$ appears $(n-i+1)$ times in $u^{(i-1)}$ and i times in $u^{(i)}$, that is, $(n+1)$ times altogether. Therefore, the arithmetic mean of $u^{(i)}$, denoted by $\mathcal{A}(u^{(i)})$, is equal to $\frac{n+1}{i+1}$ for $i = 1, \dots, n$ and $\mathcal{A}(u^{(0)}) = n$.

Let $u_k^{(i)}$, for $k = 1, \dots, n!$ and $i = 0, \dots, n$, denote the vectors that are obtained from all possible permutations of the components of $u^{(i)}$. Observe that

$$(u^{(0)}, v^{(1)}, \dots, v^{(n)}) = \frac{1}{n!} \sum_{k=1}^{n!} (u_k^{(0)}, \dots, u_k^{(n)}).$$

Then, by the increasingness, Jensen concavity and symmetry of the mean M, we obtain

$$\begin{aligned} p_{n+1} = M(v) &= M(v^{(0)}, v^{(1)}, \dots, v^{(n)}) \geqslant M(u^{(0)}, v^{(1)}, \dots, v^{(n)}) \\ &\geqslant \frac{1}{n!} \sum_{k=1}^{n!} M(u_k^{(0)}, \dots, u_k^{(n)}) = M(u^{(0)}, \dots, u^{(n)}) = M(u) = p_n. \end{aligned}$$

This proves that (p_n) is non-deceasing and, therefore it has a (possibly infinite) limit. $\square$

4. Applications

In this section we demonstrate the consequences of our results for Gini means and also for the Gaussian product of symmetric, homogeneous, increasing, Jensen concave and repetition invariant means, in particular, the Gaussian product of Hölder means.

4.1. Gini means

Gini means are symmetric and repetition invariant and min-diminishing (first two properties are simple while the third one was proved in [51]). Moreover, by the results of Losonczi [34, 35], the Gini mean $\mathcal{G}_{p,q}$ is increasing and Jensen concave if and only if $pq \leqslant 0$ and $\min(p,q) \leqslant 0 \leqslant \max(p,q) \leqslant 1$, respectively. In particular it implies that Hölder mean $\mathcal{P}_p$ is Jensen concave if and only if $p \leqslant 1$.

In view of Theorem 1.6, we have the characterization of pairs (p,q) such that $\mathcal{G}_{p,q}$ is a Hardy mean. In order to calculate the Hardy constant of Gini means using Corollary 3.5, we need to establish the following result.

LEMMA 4.1. *Let* $p,q \in (-\infty,1)$. *Then*

$$\lim_{n\to\infty} n \cdot \mathcal{G}_{p,q}\left(1,\tfrac{1}{2},\dots,\tfrac{1}{n}\right) = \begin{cases} \left(\dfrac{1-q}{1-p}\right)^{\frac{1}{p-q}} & \text{if } p \neq q, \\ e^{\frac{1}{1-p}} & \text{if } p = q. \end{cases}$$

Proof. For every $s \in (-1,\infty)$, one has

$$\lim_{n\to\infty} \frac{1}{n}\sum_{i=1}^{n}\left(\frac{i}{n}\right)^s = \int_0^1 x^s dx = \frac{1}{1+s}.$$

Using this equality, for $p,q<1$, $p \neq q$, we simply obtain

$$\begin{aligned} &\lim_{n\to\infty} n \cdot \mathcal{G}_{p,q}\left(1,\tfrac{1}{2},\dots,\tfrac{1}{n}\right) \\ &\quad = \lim_{n\to\infty} n \cdot \left(\frac{1+2^{-p}+3^{-p}+\cdots+n^{-p}}{1+2^{-q}+3^{-q}+\cdots+n^{-q}}\right)^{\frac{1}{p-q}} \\ &\quad = \lim_{n\to\infty} \left(\frac{\frac{1}{n}\left[\left(\frac{1}{n}\right)^{-p}+\left(\frac{2}{n}\right)^{-p}+\left(\frac{3}{n}\right)^{-p}+\cdots+\left(\frac{n-1}{n}\right)^{-p}+1\right]}{\frac{1}{n}\left[\left(\frac{1}{n}\right)^{-q}+\left(\frac{2}{n}\right)^{-q}+\left(\frac{3}{n}\right)^{-q}+\cdots+\left(\frac{n-1}{n}\right)^{-q}+1\right]}\right)^{\frac{1}{p-q}} \\ &\quad = \left(\frac{1-q}{1-p}\right)^{\frac{1}{p-q}}. \end{aligned}$$

The proof for the case $p=q<1$ is analogous. □

Using this lemma and the properties that are mentioned just before, we obtain the following

COROLLARY 4.2. *Let* $p,q \in \mathbb{R}$, $\min(p,q) \leqslant 0 \leqslant \max(p,q) < 1$. *Then*

$$\mathcal{H}_\infty(\mathcal{G}_{p,q}) = \begin{cases} \left(\dfrac{1-q}{1-p}\right)^{\frac{1}{p-q}} & p \neq q, \\ e & p = q = 0. \end{cases}$$

Proof. Due to the assumption $\min(p,q) \leqslant 0 \leqslant \max(p,q) < 1$ and in view of the results of Losonczi [34, 35], the Gini mean $\mathcal{G}_{p,q}$ is increasing and Jensen concave. Furthermore, $\mathcal{G}_{p,q}$ is symmetric, homogeneous, and repetition invariant. Therefore, by Corollary 3.5 and Lemma 4.1, we have

$$\mathcal{H}_\infty(\mathcal{G}_{p,q}) = \lim_{n\to\infty} n \cdot \mathcal{G}_{p,q}\left(1, \tfrac{1}{2}, \dots, \tfrac{1}{n}\right) = \begin{cases} \left(\dfrac{1-q}{1-p}\right)^{\frac{1}{p-q}} & p \neq q, \\ e & p = q = 0, \end{cases}$$

which was to be proved. □

4.2. Gaussian product

PROPOSITION 4.3. *Let* $N \in \mathbb{N}$ *and let* $M_1, \dots, M_N \colon \bigcup_{n=1}^{\infty} \mathbb{R}_+^n \to \mathbb{R}_+$ *be symmetric, homogeneous, increasing, Jensen concave and repetition invariant means. If* M_i *is Hardy for each* $i \in \{1, \dots, N\}$, *then so is their Gaussian product* $M_\otimes$ *and*

$$\mathcal{H}_\infty(M_\otimes) = M_\otimes\big(\mathcal{H}_\infty(M_1), \dots, \mathcal{H}_\infty(M_N)\big). \tag{4.1}$$

Proof. In view of Lemma 2.3, the Gaussian product $M_\otimes$ is a symmetric, homogeneous, increasing, Jensen concave and repetition invariant mean. The Jensen concavity and the local boundedness by the Bernstein–Doetsch Theorem implies that $M_\otimes$ is concave and therefore it is also continuous (see [8], [29]). Thus, by Corollary 3.5, we have

$$\begin{aligned} \mathcal{H}_\infty(M_\otimes) &= \lim_{n\to\infty} n \cdot M_\otimes\left(1, \tfrac{1}{2}, \dots, \tfrac{1}{n}\right) \\ &= \lim_{n\to\infty} n \cdot M_\otimes\left(M_1(1, \tfrac{1}{2}, \dots, \tfrac{1}{n}), \dots, M_N(1, \tfrac{1}{2}, \dots, \tfrac{1}{n})\right) \\ &= \lim_{n\to\infty} M_\otimes\left(nM_1(1, \tfrac{1}{2}, \dots, \tfrac{1}{n}), \dots, nM_N(1, \tfrac{1}{2}, \dots, \tfrac{1}{n})\right) \\ &= M_\otimes\left(\lim_{n\to\infty} nM_1(1, \tfrac{1}{2}, \dots, \tfrac{1}{n}), \dots, \lim_{n\to\infty} nM_N(1, \tfrac{1}{2}, \dots, \tfrac{1}{n})\right) \\ &= M_\otimes\left(\mathcal{H}_\infty(M_1), \dots, \mathcal{H}_\infty(M_N)\right), \end{aligned}$$

which proves formula (4.1). □

COROLLARY 4.4. *Let* $N \in \mathbb{N}$ *and* $(\lambda_1, \dots, \lambda_N) \in \mathbb{R}^N$ *then the Gaussian product* $\mathcal{P}_\otimes$ *of the Hölder means* $\mathcal{P}_{\lambda_1}, \dots, \mathcal{P}_{\lambda_N}$ *is a Hardy mean if and only if* $\max_{1\leqslant k\leqslant N} \lambda_k < 1$. *Furthermore, in this case,*

$$\mathcal{H}_\infty(\mathcal{P}_\otimes) = \mathcal{P}_\otimes\big(\mathcal{H}_\infty(\mathcal{P}_{\lambda_1}), \dots, \mathcal{H}_\infty(\mathcal{P}_{\lambda_N})\big). \tag{4.2}$$

Proof. The first part of the statement of the above Corollary was proved in [47] by Pasteczka. If $\lambda_k < 1$, then $\mathcal{P}_{\lambda_k}$ is a Jensen concave mean, therefore (4.2) is a particular case of (4.1). $\square$

For example, for the *geometric-harmonic mean* $\mathcal{P}_{-1} \otimes \mathcal{P}_0$, i.e., for the Gaussian product of the harmonic mean $\mathcal{P}_{-1}$ and the geometric mean $\mathcal{P}_0$, we get

$$\mathcal{H}_\infty(\mathcal{P}_{-1} \otimes \mathcal{P}_0) = (\mathcal{P}_{-1} \otimes \mathcal{P}_0)(\mathcal{H}_\infty(\mathcal{P}_{-1}), \mathcal{H}_\infty(\mathcal{P}_0)) = (\mathcal{P}_{-1} \otimes \mathcal{P}_0)(2, e) \approx 2,318.$$

REFERENCES

[1] J. ACZÉL AND Z. DARÓCZY, *Über verallgemeinerte quasilineare Mittelwerte, die mit Gewichtsfunktionen gebildet sind*, Publ. Math. Debrecen, **10**: 171–190, 1963.

[2] M. BAJRAKTAREVIĆ, *Sur une équation fonctionnelle aux valeurs moyennes*, Glasnik Mat.-Fiz. Astronom. Društvo Mat. Fiz. Hrvatske Ser. II, **13**: 243–248, 1958.

[3] M. BAJRAKTAREVIĆ, *Über die Vergleichbarkeit der mit Gewichtsfunktionen gebildeten Mittelwerte*, Studia Sci. Math. Hungar., **4**: 3–8, 1969.

[4] SZ. BAJÁK AND ZS. PÁLES, *Computer aided solution of the invariance equation for two-variable Gini means*, Comput. Math. Appl., **58**: 334–340, 2009.

[5] SZ. BAJÁK AND ZS. PÁLES, *Invariance equation for generalized quasi-arithmetic means*, Aequationes Math., **77**: 133–145, 2009.

[6] SZ. BAJÁK AND ZS. PÁLES, *Computer aided solution of the invariance equation for two-variable Stolarsky means*, Appl. Math. Comput., **216** (11): 3219–3227, 2010.

[7] SZ. BAJÁK AND ZS. PÁLES, *Solving invariance equations involving homogeneous means with the help of computer*, Appl. Math. Comput., **219** (11): 6297–6315, 2013.

[8] F. BERNSTEIN AND G. DOETSCH, *Zur Theorie der konvexen Funktionen*, Math. Ann., **76** (4): 514–526, 1915.

[9] J. M. BORWEIN AND P. B. BORWEIN, *Pi and the AGM*, Canadian Mathematical Society Series of Monographs and Advanced Texts, John Wiley & Sons, Inc., New York, 1987, A study in analytic number theory and computational complexity, A Wiley-Interscience Publication.

[10] T. CARLEMAN, *Sur les fonctions quasi-analitiques*, Conférences faites au cinquième congrès des mathématiciens scandinaves, Helsinki, page 181–196, 1932.

[11] Z. DARÓCZY, *A general inequality for means*, Aequationes Math., **7** (1): 16–21, 1971.

[12] Z. DARÓCZY, *Über eine Klasse von Mittelwerten*, Publ. Math. Debrecen, **19**: 211–217 (1973), 1972.

[13] Z. DARÓCZY, *Functional equations involving means and Gauss compositions of means*, Nonlinear Anal., **63** (5–7): e417–e425, 2005.

[14] Z. DARÓCZY AND L. LOSONCZI, *Über den Vergleich von Mittelwerten*, Publ. Math. Debrecen, **17**: 289–297 (1971), 1970.

[15] Z. DARÓCZY AND ZS. PÁLES, *On comparison of mean values*, Publ. Math. Debrecen, **29** (1–2): 107–115, 1982.

[16] Z. DARÓCZY AND ZS. PÁLES, *Multiplicative mean values and entropies*, In Functions, series, operators, Vol. I, II (Budapest, 1980), page 343–359, North-Holland, Amsterdam, 1983.

[17] Z. DARÓCZY AND ZS. PÁLES, *Gauss-composition of means and the solution of the Matkowski-Sutô problem*, Publ. Math. Debrecen, **61** (1–2): 157–218, 2002.

[18] Z. DARÓCZY AND ZS. PÁLES, *The Matkowski-Sutô problem for weighted quasi-arithmetic means*, Acta Math. Hungar., **100** (3): 237–243, 2003.

[19] D. M. E. FOSTER AND G. M. PHILLIPS, *The arithmetic-harmonic mean*, Math. Comp., **42** (165): 183–191, 1984.

[20] C. F. GAUSS, *Nachlass: Aritmetisch-geometrisches Mittel*, In Werke 3 (Göttingem 1876), page 357–402, Königliche Gesellschaft der Wissenschaften, 1818.

[21] D. GŁAZOWSKA, *A solution of an open problem concerning Lagrangian mean-type mappings*, Cent. Eur. J. Math., **9** (5): 1067–1073, 2011.

[22] D. GŁAZOWSKA, *Some Cauchy mean-type mappings for which the geometric mean is invariant*, J. Math. Anal. Appl., **375** (2): 418–430, 2011.

[23] G. H. HARDY, *Note on a theorem of Hilbert concerning series of positive terms*, Proc. London Math. Soc., **23** (2), 1925.

[24] G. H. HARDY, J. E. LITTLEWOOD, AND G. PÓLYA, *Inequalities*, Cambridge University Press, Cambridge, 1934 (first edition), 1952 (second edition).

[25] T. KALUZA AND G. SZEGŐ, *Über Reihen mit lauter positiven Gliedern. J. London Math. Soc.*, 2:266–272, 1927.

[26] K. S. KEDLAYA, *Proof of a mixed arithmetic-mean, geometric-mean inequality*, Amer. Math. Monthly, **101** (4): 355–357, 1994.

[27] K. S. KEDLAYA, *Notes: A Weighted Mixed-Mean Inequality*, Amer. Math. Monthly, **106** (4): 355–358, 1999.

[28] K. KNOPP, *Über Reihen mit positiven Gliedern*, J. London Math. Soc., **3**: 205–211, 1928.

[29] M. KUCZMA, *An Introduction to the Theory of Functional Equations and Inequalities*, volume 489 of Prace Naukowe Uniwersytetu Śląskiego w Katowicach, Państwowe Wydawnictwo Naukowe – Uniwersytet Śląski, Warszawa–Kraków–Katowice, 1985. 2nd edn. (ed. by A. Gilányi), Birkhäuser, Basel, 2009.

[30] A. KUFNER, L. MALIGRANDA, AND L. E. PERSSON, *The Hardy Inequality: About Its History and Some Related Results*, Vydavatelskỳ servis, 2007.

[31] A. KUFNER AND L.-E. PERSSON, *Integral Inequalities with Weights*, Matematický ústav AVČR, Prague, 1990.

[32] D. H. LEHMER, *On the compounding of certain means*, J. Math. Anal. Appl., **36**: 183–200, 1971.

[33] L. LOSONCZI, *Über den Vergleich von Mittelwerten die mit Gewichtsfunktionen gebildet sind*, Publ. Math. Debrecen, **17**: 203–208 (1971), 1970.

[34] L. LOSONCZI, *Subadditive Mittelwerte*, Arch. Math. (Basel), **22**: 168–174, 1971.

[35] L. LOSONCZI, *Subhomogene Mittelwerte*, Acta Math. Acad. Sci. Hungar., **22**: 187–195, 1971.

[36] L. LOSONCZI, *Über eine neue Klasse von Mittelwerten*, Acta Sci. Math. (Szeged), **32**: 71–81, 1971.

[37] L. LOSONCZI, *General inequalities for nonsymmetric means*, Aequationes Math., **9**: 221–235, 1973.

[38] L. LOSONCZI, *Inequalities for integral mean values*, J. Math. Anal. Appl., **61** (3): 586–606, 1977.

[39] J. MATKOWSKI, *Iterations of mean-type mappings and invariant means*, Ann. Math. Sil., (13): 211–226, 1999, European Conference on Iteration Theory (Muszyna-Złockie, 1998).

[40] J. MATKOWSKI, *On iteration semigroups of mean-type mappings and invariant means*, Aequationes Math., **64** (3): 297–303, 2002.

[41] J. MATKOWSKI, *Lagrangian mean-type mappings for which the arithmetic mean is invariant*, J. Math. Anal. Appl., **309** (1): 15–24, 2005.

[42] J. MATKOWSKI, *Iterations of the mean-type mappings and uniqueness of invariant means*, Annales Univ. Sci. Budapest., Sect. Comp., **41**: 145–158, 2013.

[43] J. MATKOWSKI AND ZS. PÁLES, *Characterization of generalized quasi-arithmetic means*, Acta Sci. Math. (Szeged), **81** (3–4): 447–456, 2015.

[44] D. S. MITRINOVIĆ, J. E. PEČARIĆ, AND A. M. FINK, *Inequalities Involving Functions and Their Integrals and Derivatives*, volume 53 of Mathematics and its Applications (East European Series), Kluwer Academic Publishers Group, Dordrecht, 1991.

[45] P. MULHOLLAND, *On the generalization of Hardy's inequality*, J. London Math. Soc., **7**: 208–214, 1932.

[46] B. OPIC AND A. KUFNER, *Hardy-type Inequalities*, volume 219 of Pitman Research Notes in Mathematics, Longman Scientific & Technical, Harlow, 1990.

[47] P. PASTECZKA, *On negative results concerning Hardy means*, Acta Math. Hungar., **146** (1): 98–106, 2015.

[48] P. PASTECZKA, *Scales of quasi-arithmetic means determined by an invariance property*, J. Difference Equ. Appl., **21** (8): 742–755, 2015.

[49] J. E. PEČARIĆ AND K. B. STOLARSKY, *Carleman's inequality: history and new generalizations*, Aequationes Math., **61** (1–2): 49–62, 2001.

[50] ZS. PÁLES, *A generalization of the Minkowski inequality*, J. Math. Anal. Appl., **90** (2): 456–462, 1982.

[51] ZS. PÁLES, *Characterization of quasideviation means*, Acta Math. Acad. Sci. Hungar., **40** (3–4): 243–260, 1982.

[52] ZS. PÁLES, *Inequalities for homogeneous means depending on two parameters*, In E. F. Beckenbach and W. Walter, editors, General Inequalities, 3 (Oberwolfach, 1981), volume 64 of International Series of Numerical Mathematics, page 107–122. Birkhäuser, Basel, 1983.
[53] ZS. PÁLES, *On complementary inequalities*, Publ. Math. Debrecen, **30** (1–2): 75–88, 1983.
[54] ZS. PÁLES, *On Hölder-type inequalities*, J. Math. Anal. Appl., **95** (2): 457–466, 1983.
[55] ZS. PÁLES, *Inequalities for comparison of means*, In W. Walter, editor, General Inequalities, 4 (Oberwolfach, 1983), volume 71 of International Series of Numerical Mathematics, page 59–73, Birkhäuser, Basel, 1984.
[56] ZS. PÁLES, *Ingham Jessen's inequality for deviation means*, Acta Sci. Math. (Szeged), **49** (1–4): 131–142, 1985.
[57] ZS. PÁLES, *On the characterization of quasi-arithmetic means with weight function*, Aequationes Math., **32** (2–3): 171–194, 1987.
[58] ZS. PÁLES, *General inequalities for quasideviation means*, Aequationes Math., **36** (1): 32–56, 1988.
[59] ZS. PÁLES, *On a Pexider-type functional equation for quasideviation means*, Acta Math. Hungar., **51** (1–2): 205–224, 1988.
[60] ZS. PÁLES, *On homogeneous quasideviation means*, Aequationes Math., **36** (2-3): 132–152, 1988.
[61] ZS. PÁLES, *Nonconvex functions and separation by power means*, Math. Inequal. Appl., **3** (2): 169–176, 2000.
[62] ZS. PÁLES AND L.-E. PERSSON, *Hardy type inequalities for means*, Bull. Austr. Math. Soc., **70** (3): 521–528, 2004.
[63] I. J. SCHOENBERG, *Mathematical time exposures*, Mathematical Association of America, Washington, DC, 1982.
[64] G. TOADER AND S. TOADER, *Greek means and the arithmetic-geometric mean*, RGMIA Monographs, Victoria University, 2005.

(Received January 3, 2016)

Zsolt Páles
Institute of Mathematics, University of Debrecen
Egyetem tér 1, 4032 Debrecen, Hungary
e-mail: pales@science.unideb.hu

Paweł Pasteczka
Institute of Mathematics
Pedagogical University of Cracow
Podchorążych str 2, 30-084 Cracow, Poland
e-mail: ppasteczka@up.krakow.pl

Mathematical
Inequalities
& Applications
Volume 19, Number 4 (2016), 1159–1168 doi:10.7153/mia-19-85

NEW OSTROWSKI LIKE INEQUALITIES FOR GG–CONVEX AND GA–CONVEX FUNCTIONS

MERVE AVCI ARDIÇ, AHMET OCAK AKDEMIR AND ERHAN SET

(*Communicated by S. Varošanec*)

Abstract. In this paper, we established some Ostrowski like integral inequalities for functions whose derivatives of absolute values are GG-convex and GA-convex functions via a new integral identity. General results are obtained using the weighted Montgomery identity. Also, particular results for the weight function $w(t) = \frac{1}{t \log b/a}$ are given.

1. Introduction

We will start with the definiton of convexity that has utilization in all branches of mathematics and has several applications in mathematical analysis, optimization and statictics.

The function $f : I \subset \mathbb{R} \to \mathbb{R}$ is a convex function on an interval I, if the inequality

$$f(tx + (1-t)y) \leqslant tf(x) + (1-t)f(y)$$

holds for all $x, y \in I$ and $t \in [0,1]$.

Let $f : I \subset [0,\infty) \to \mathbb{R}$ be a differentiable mapping on I°, the interior of the interval I, such that $f' \in L[a,b]$ where $a, b \in I$ with $a < b$. If $|f'(x)| \leqslant M$, then the following inequality holds

$$\left| f(x) - \frac{1}{b-a} \int_a^b f(u)\,du \right| \leqslant \frac{M}{b-a} \left[\frac{(x-a)^2 + (b-x)^2}{2} \right].$$

This inequality is well known in the literature as the Ostrowski inequality.

In [4], Niculescu mentioned the following considerable definitions:

The GG-convex functions (called also multiplicatively convex functions) are those functions $f : I \to J$ (I, J are subintervals of $(0,\infty)$) such that

$$x, y \in I \text{ and } \lambda \in [0,1] \Longrightarrow f\left(x^{1-\lambda} y^{\lambda}\right) \leqslant f(x)^{1-\lambda} f(y)^{\lambda}. \tag{1}$$

Mathematics subject classification (2010): 26D15, 26A51, 26E60, 41A55.
Keywords and phrases: GG-convex functions, GA-convex functions, the Hölder inequality, the weighted Montgomery identity.

Paper MIA-19-85

The class of all GA-convex functions is constituted by all functions $f : I \to \mathbb{R}$ (defined on subintervals of $(0,\infty)$) for which

$$x,y \in I \text{ and } \lambda \in [0,1] \Longrightarrow f\left(x^{1-\lambda}y^{\lambda}\right) \leqslant (1-\lambda)f(x)+\lambda f(y). \tag{2}$$

Besides, recall that the condition of GA-convexity is $x^2f''+xf' \geqslant 0$ which implies all twice differentiable nondecreasing convex functions are also GA-convex.

For recent results, generalizations, improvements and counterparts see the papers [3], [4], [6], [7], [8], [9] and references therein.

In [2], the authors have mentioned the weighted Montgomery identity as following (see also [1] and [5]):

$$f(x) = \int_a^b w(t)f(t)dt + \int_a^b P_w(x,t)f'(t)dt, \tag{3}$$

where $f : [a,b] \to \mathbb{R}$ is differentiable on $[a,b]$, $f' : [a,b] \to \mathbb{R}$ is integrable on $[a,b]$ and $w : [a,b] \to [0,\infty)$ is some normalized weight function, i.e. an integrable function satisfying $\int_a^b w(t)dt = 1$, $W(t) = \int_a^t w(x)dx$ for $t \in [0,1]$. The weighted Peano kernel is

$$P_w(x,t) = \begin{cases} W(t), & a \leqslant t \leqslant x \\ W(t)-1, & x < t \leqslant b. \end{cases}$$

For the uniform weight function $w(t) = \frac{1}{b-a}$, $t \in [a,b]$, (3) reduces to the Montgomery identity,

$$f(x) = \frac{1}{b-a}\int_a^b f(t)dt + \int_a^b P(x,t)f'(t)dt, \tag{4}$$

where

$$P(x,t) = \begin{cases} \dfrac{t-a}{b-a}, & a \leqslant t \leqslant x \\ \dfrac{t-b}{b-a}, & x < t \leqslant b. \end{cases}$$

In [2], Aljinović and Pečarić have given a discrete analogue of the weighted Montgomery identity for mappings of two variables and have proved some new discrete Ostrowski type inequalities.

The main aim of this paper is to prove some new integral inequalities for GG-convex and GA-convex functions by using a new integral identity.

2. New inequalities for GG- and GA-convex functions

We will give a new integral identity which is emboided in the following lemma to obtain our results. The proof of identity is based on using the weighted montgomery identity.

LEMMA 1. *Let $I \subset (0,\infty)$ be an interval, $a,b \in I^o$, $a<b$. Let w be a nonnegative integrable function on $[a,b]$ such that $\int_a^b w(x)dx = 1$ and let $W(t) = \int_a^t w(x)dx$. Let $f : I \to \mathbb{R}$ be a function differentiable on I^o. Then for $x \in [a,b]$*

$$f(x) - \int_a^b w(t)f(t)dt = \log\frac{x}{a} I\left(f',a,x;W\right) + \log\frac{b}{x} I\left(f',x,b;W-1\right)$$

holds, where $I(F,v,u;Q) = \int_0^1 Q\left(u^{1-\tau}v^{\tau}\right) F\left(u^{1-\tau}v^{\tau}\right) u^{1-\tau}v^{\tau}d\tau$, provided that all integrals exist.

Proof. Using the weighted Montgomery identity we get

$$\begin{aligned} f(x) - \int_a^b w(t)f(t)dt &= \int_a^b P(w,t)f'(t)dt \\ &= \int_a^x W(t)f'(t)dt + \int_x^b (W(t)-1)f'(t)dt \\ &= \int_0^1 W\left(x^{1-\tau}a^{\tau}\right) f'\left(x^{1-\tau}a^{\tau}\right) x^{1-\tau}a^{\tau}\log\frac{x}{a}d\tau \\ &\quad + \int_0^1 \left(W(b^{1-\tau}x^{\tau})-1\right) f'(b^{1-\tau}x^{\tau})b^{1-\tau}x^{\tau}\log\frac{b}{x}d\tau \\ &= \log\frac{x}{a} I\left(f',a,x;W\right) + \log\frac{b}{x} I\left(f',x,b;W-1\right) \end{aligned}$$

where in the first integral we use substitution $t = x^{1-\tau}a^{\tau}$, and in the second integral we use substitution $t = b^{1-\tau}x^{\tau}$.

REMARK 1. If we choose $w(u) = \frac{1}{u\log b/a}$ in Lemma 1, we get the following equality:

$$\begin{aligned} &\log\frac{b}{a}f(x) - \int_a^b \frac{f(u)}{u}du \\ &= \log^2\frac{x}{a}\int_0^1 (1-\tau)x^{1-\tau}a^{\tau}f'\left(x^{1-\tau}a^{\tau}\right)d\tau - \log^2\frac{b}{x}\int_0^1 \tau b^{1-\tau}x^{\tau}f'\left(b^{1-\tau}x^{\tau}\right)d\tau. \end{aligned}$$

A new inequality for GG-convex functions is given in the following theorem.

THEOREM 1. *Let $I \subset (0,\infty)$ be an interval, $a,b \in I^o$, $a<b$. Let w be a nonnegative integrable function on $[a,b]$ such that $\int_a^b w(x)dx = 1$ and let $W(t) = \int_a^t w(x)dx$. Let $f : I \to \mathbb{R}$ be a function differentiable on I^o. If $|f'|^q$ is GG-convex function on $[a,b]$ for some $q>1$, then for all $x \in [a,b]$, following inequality holds*

$$\left|f(x)-\int_a^b w(t)f(t)dt\right|$$
$$\leqslant \log^{\frac{1}{q}}\frac{x}{a}\left(\int_a^x W(t)dt\right)^{\frac{1}{p}}\left(\frac{x|f'(x)|^q}{\log A_{a,x}}\left[-W(x)+\int_a^x w(t)A_{a,x}^{\frac{\log t/x}{\log a/x}}dt\right]\right)^{\frac{1}{q}}$$
$$+\log^{\frac{1}{q}}\frac{b}{x}\left(\int_x^b (1-W(t))\,dt\right)^{\frac{1}{p}}\left(\frac{b|f'(b)|^q}{\log A_{x,b}}\left[(1-W(x))A_{x,b}-\int_x^b w(t)A_{x,b}^{\frac{\log t/b}{\log x/b}}dt\right]\right)^{\frac{1}{q}}$$

where $\frac{1}{p}=1-\frac{1}{q}$ *and* $A_{v,u}=\frac{v|f'|^q(v)}{u|f'|^q(u)}$, *provided that all integrals exist.*

Proof. From Lemma 1 and the Hölder inequality, we get

$$\left|f(x)-\int_a^b w(t)f(t)dt\right| \tag{5}$$
$$\leqslant \log\frac{x}{a}I\left(\left|f'\right|,a,x;W\right)+\log\frac{b}{x}I\left(\left|f'\right|,x,b;1-W\right)$$
$$\leqslant \log\frac{x}{a}\left(\int_0^1 W\left(x^{1-\tau}a^{\tau}\right)x^{1-\tau}a^{\tau}d\tau\right)^{\frac{1}{p}}\left(\int_0^1 W\left(x^{1-\tau}a^{\tau}\right)\left|f'\right|^q\left(x^{1-\tau}a^{\tau}\right)x^{1-\tau}a^{\tau}d\tau\right)^{\frac{1}{q}}$$
$$+\log\frac{b}{x}\left(\int_0^1\left(1-W(b^{1-\tau}x^{\tau})\right)b^{1-\tau}x^{\tau}d\tau\right)^{\frac{1}{p}}$$
$$\times\left(\int_0^1\left(1-W(b^{1-\tau}x^{\tau})\right)\left|f'\right|^q\left(b^{1-\tau}x^{\tau}\right)b^{1-\tau}x^{\tau}d\tau\right)^{\frac{1}{q}}$$
$$=\log\frac{x}{a}\left(I\left(1,a,x;W\right)\right)^{\frac{1}{p}}\left(I\left(|f'|^q,a,x;W\right)\right)^{\frac{1}{q}}$$
$$+\log\frac{b}{x}\left(I\left(1,x,b;1-W\right)\right)^{\frac{1}{p}}\left(I\left(|f'|^q,x,b;1-W\right)\right)^{\frac{1}{q}},$$

where $I(F,v,u;Q)$ is defined as in Lemma 1. Using the GG-convexity of $|f'|^q$ and integration by parts, we get

$$I\left(\left|f'\right|^q,v,u;Q\right)\leqslant\frac{u|f'|^q(u)}{\log A_{v,u}}\left[-Q(u)+Q(v)A_{v,u}+\int_v^u Q'(t)A_{v,u}^{\frac{\log t/u}{\log v/u}}dt\right]. \tag{6}$$

Calculating $I\left(1,v,u;Q\right)$, we get

$$I\left(1,v,u;Q\right)=\frac{1}{\log u/v}\int_v^u Q(t)dt. \tag{7}$$

Using (6) and (7) in (5), we get the desired result.

REMARK 2. In Theorem 1, if we choose $q \to 1$, we get the following inequality:

$$\begin{aligned}
&\left| f(x) - \int_a^b w(t) f(t) dt \right| \\
&\leqslant \log \frac{x}{a} \left(\frac{x|f'(x)|}{\log A_{a,x}} \left[-W(x) + \int_a^x w(t) A_{a,x}^{\frac{\log t/x}{\log a/x}} dt \right] \right) \\
&\quad + \log \frac{b}{x} \left(\frac{b|f'(b)|}{\log A_{x,b}} \left[(1 - W(x)) A_{x,b} - \int_x^b w(t) A_{x,b}^{\frac{\log t/b}{\log x/b}} dt \right] \right).
\end{aligned}$$

We can consider inequalities for different weights w, but here we give only result for a particular weight $w(t) = \frac{1}{t \log b/a}$.

COROLLARY 1. *If assumptions of Theorem 1 are satisfied with* $w(t) = \frac{1}{t \log b/a}$, *then the following inequality holds:*

$$\begin{aligned}
&\left| f(x) - \frac{1}{\log b - \log a} \int_a^b \frac{f(t)}{t} dt \right| \\
&\leqslant \frac{\log^{1+\frac{1}{q}} \frac{x}{a}}{\log \frac{b}{a}} (x - L(a,x))^{\frac{1}{p}} \left[\frac{x|f'|^q(x) - L(a|f'|^q(a), x|f'|^q(x))}{\log \frac{x|f'|^q(x)}{a|f'|^q(a)}} \right]^{\frac{1}{q}} \\
&\quad + \frac{\log^{1+\frac{1}{q}} \frac{b}{x}}{\log \frac{b}{a}} (L(x,b) - x)^{\frac{1}{p}} \left[\frac{L(x|f'|^q(x), b|f'|^q(b)) - x|f'|^q(x)}{\log \frac{b|f'|^q(b)}{x|f'|^q(x)}} \right]^{\frac{1}{q}}
\end{aligned}$$

where $L(x,y) = \frac{y-x}{\log y - \log x}$.

THEOREM 2. *Under the assumptions of Theorem 1, we get the following inequality*

$$\begin{aligned}
&\left| f(x) - \int_a^b w(t) f(t) dt \right| \\
&\leqslant x|f'(x)| \log^{\frac{1}{q}} \frac{x}{a} \left(\int_a^x \frac{W^p(t)}{t} dt \right)^{\frac{1}{p}} \left(\frac{1}{\log C_{a,x}} [C_{a,x} - 1] \right)^{\frac{1}{q}} \\
&\quad + b|f'(b)| \log^{\frac{1}{q}} \frac{b}{x} \left(\int_x^b \frac{(1 - W(t))^p}{t} dt \right)^{\frac{1}{p}} \left(\frac{1}{\log C_{x,b}} [C_{x,b} - 1] \right)^{\frac{1}{q}}
\end{aligned}$$

where $C_{v,u} = \frac{v^q |f'|^q(v)}{u^q |f'|^q(u)}$.

Proof. From Lemma 1, using the Hölder inequality and GG-convexity of $|f'|^q$ we get

$$\begin{aligned}
&\left|f(x)-\int_a^b w(t)f(t)dt\right| \qquad (8)\\
&\leqslant \log\frac{x}{a}\left(\int_0^1 W^p\left(x^{1-\tau}a^\tau\right)d\tau\right)^{\frac{1}{p}}\left(\int_0^1 \left|f'\right|^q\left(x^{1-\tau}a^\tau\right)x^{(1-\tau)q}a^{\tau q}d\tau\right)^{\frac{1}{q}}\\
&\quad+\log\frac{b}{x}\left(\int_0^1 \left(1-W(b^{1-\tau}x^\tau)\right)^p d\tau\right)^{\frac{1}{p}}\left(\int_0^1 \left|f'\right|^q\left(b^{1-\tau}x^\tau\right)b^{(1-\tau)q}x^{\tau q}d\tau\right)^{\frac{1}{q}}\\
&\leqslant \log\frac{x}{a}\left(\int_0^1 W^p\left(x^{1-\tau}a^\tau\right)d\tau\right)^{\frac{1}{p}}\left(\int_0^1 \left|f'\right|^{(1-\tau)q}(x)\left|f'\right|^{\tau q}(a)x^{(1-\tau)q}a^{\tau q}d\tau\right)^{\frac{1}{q}}\\
&\quad+\log\frac{b}{x}\left(\int_0^1 \left(1-W(b^{1-\tau}x^\tau)\right)^p d\tau\right)^{\frac{1}{p}}\left(\int_0^1 \left|f'\right|^{(1-\tau)q}(b)\left|f'\right|^{\tau q}(x)b^{(1-\tau)q}x^{\tau q}d\tau\right)^{\frac{1}{q}}.
\end{aligned}$$

By a simple computation, we get

$$\int_0^1 Q^p\left(u^{1-\tau}v^\tau\right)d\tau=\frac{1}{\log\frac{u}{v}}\int_v^u\frac{Q^p(t)}{t}dt \qquad (9)$$

and

$$\int_0^1 C_{v,u}^\tau d\tau=\frac{C_{v,u}-1}{\log C_{v,u}}, \qquad (10)$$

where Q is a function and $C_{v,u}$ is defined in theorem. Using (9) and (10) in (8) we get the desired result.

COROLLARY 2. *In Theorem 2, if we choose* $w(t)=\frac{1}{t\log b/a}$, *then we get the following inequality:*

$$\begin{aligned}
&\left|f(x)-\frac{1}{\log b-\log a}\int_a^b\frac{f(t)}{t}dt\right|\\
&\leqslant\frac{1}{\log b-\log a}\left(\frac{1}{p+1}\right)^{\frac{1}{p}}\left[\log^2\frac{x}{a}\left(L\left(a^q\left|f'\right|^q(a),x^q\left|f'\right|^q(x)\right)\right)^{\frac{1}{q}}\right.\\
&\quad\left.+\log^2\frac{b}{x}\left(L\left(x^q\left|f'\right|^q(x),b^q\left|f'\right|^q(b)\right)\right)^{\frac{1}{q}}\right].
\end{aligned}$$

THEOREM 3. *Under the assumptions of Theorem 1, we get the following inequality*

$$\begin{aligned}
&\left|f(x)-\int_a^b w(t)f(t)dt\right| \\
&\leqslant \left|f'(x)\right|\log^{\frac{1}{q}}\frac{x}{a}\left(\int_a^x W(t)t^{p-1}dt\right)^{\frac{1}{p}}\left(\frac{1}{\log B_{a,x}}\left[-W(x)+\int_a^x B_{a,x}^{\frac{\log t/x}{\log a/x}}w(t)dt\right]\right)^{\frac{1}{q}} \\
&\quad+\left|f'(b)\right|\log^{\frac{1}{q}}\frac{b}{x}\left(\int_x^b (1-W(t))\,t^{p-1}dt\right)^{\frac{1}{p}} \\
&\quad\times\left(\frac{1}{\log B_{x,b}}\left[(1-W(x))\,B_{x,b}-\int_x^b B_{x,b}^{\frac{\log t/b}{\log x/b}}w(t)dt\right]\right)^{\frac{1}{q}}
\end{aligned}$$

where $B_{v,u}=\frac{\left|f'\right|^q(v)}{\left|f'\right|^q(u)}$.

Proof. From Lemma 1, using the Hölder inequality and GG-convexity of $|f'|^q$ we get

$$\begin{aligned}
&\left|f(x)-\int_a^b w(t)f(t)dt\right| \qquad (11)\\
&\leqslant \log\frac{x}{a}\left(\int_0^1 W\left(x^{1-\tau}a^{\tau}\right)\left(x^{1-\tau}a^{\tau}\right)^p d\tau\right)^{\frac{1}{p}}\left(\int_0^1 W\left(x^{1-\tau}a^{\tau}\right)\left|f'\right|^q\left(x^{1-\tau}a^{\tau}\right)d\tau\right)^{\frac{1}{q}} \\
&\quad+\log\frac{b}{x}\left(\int_0^1\left(1-W(b^{1-\tau}x^{\tau})\right)\left(b^{1-\tau}x^{\tau}\right)^p d\tau\right)^{\frac{1}{p}} \\
&\quad\times\left(\int_0^1\left(1-W(b^{1-\tau}x^{\tau})\right)\left|f'\right|^q\left(b^{1-\tau}x^{\tau}\right)d\tau\right)^{\frac{1}{q}} \\
&\leqslant \log\frac{x}{a}\left(\int_0^1 W\left(x^{1-\tau}a^{\tau}\right)\left(x^{1-\tau}a^{\tau}\right)^p d\tau\right)^{\frac{1}{p}}\left(\int_0^1 W\left(x^{1-\tau}a^{\tau}\right)\left|f'\right|^{(1-\tau)q}(x)\left|f'\right|^{\tau q}(a)d\tau\right)^{\frac{1}{q}} \\
&\quad+\log\frac{b}{x}\left(\int_0^1\left(1-W(b^{1-\tau}x^{\tau})\right)\left(b^{1-\tau}x^{\tau}\right)^p d\tau\right)^{\frac{1}{p}} \\
&\quad\times\left(\int_0^1\left(1-W(b^{1-\tau}x^{\tau})\right)\left|f'\right|^{(1-\tau)q}(b)\left|f'\right|^{\tau q}(x)d\tau\right)^{\frac{1}{q}}.
\end{aligned}$$

By a simple computation, we get

$$\int_0^1 Q\left(u^{1-\tau}v^{\tau}\right)\left(u^{1-\tau}v^{\tau}\right)^p d\tau=\frac{1}{\log\frac{u}{v}}\int_v^u Q(t)t^{p-1}dt \qquad (12)$$

and

$$\int_0^1 Q\left(u^{1-\tau}v^{\tau}\right)B_{v,u}^{\tau}d\tau=\frac{1}{\log B_{v,u}}\left[Q(v)B_{v,u}-Q(u)+\int_v^u B_{v,u}^{\frac{\log t/u}{\log v/u}}Q'(t)dt\right]. \qquad (13)$$

Using (12) and (13) in (11) we get the desired result.

COROLLARY 3. *In Theorem 3, if we choose* $w(t)=\frac{1}{t\log b/a}$, *we get the following inequality:*

$$\left|f(x)-\frac{1}{\log b-\log a}\int_a^b\frac{f(t)}{t}dt\right|$$
$$\leqslant\frac{1}{p^{\frac{1}{p}}\log b/a}\left\{\log^{1+\frac{1}{q}}\frac{x}{a}\left(x^p-L(a^p,x^p)\right)^{\frac{1}{p}}\left(\frac{L(|f'|^q(a),|f'|^q(x))-|f'|^q(x)}{\log\frac{|f'|^q(a)}{|f'|^q(x)}}\right)^{\frac{1}{q}}\right.$$
$$\left.+\log^{1+\frac{1}{q}}\frac{x}{b}\left(L(x^p,b^p)-x^p\right)^{\frac{1}{p}}\left(\frac{|f'|^q(x)-L(|f'|^q(x),|f'|^q(b))}{\log\frac{|f'|^q(x)}{|f'|^q(b)}}\right)^{\frac{1}{q}}\right\}.$$

THEOREM 4. *Under the assumptions of Theorem 1, we get the following inequality*

$$\left|f(x)-\int_a^b w(t)f(t)dt\right|$$
$$\leqslant\log^{\frac{1}{q}}\frac{x}{a}\left(\int_a^x W^p(t)dt\right)^{\frac{1}{p}}\left(\frac{x|f'|^q(x)}{\log A_{a,x}}\left(A_{a,x}-1\right)\right)^{\frac{1}{q}}$$
$$+\log^{\frac{1}{q}}\frac{b}{x}\left(\int_x^b(1-W(t))^p\,dt\right)^{\frac{1}{p}}\left(\frac{b|f'|^q(b)}{\log A_{x,b}}\left(A_{x,b}-1\right)\right)^{\frac{1}{q}},$$

where $A_{v,u}$ *defined as in Theorem 1.*

Proof. By a similar argument to the proof of previous theorems, since $|f'|^q$ is GG-convex function on $[a,b]$, from Lemma 1 and the Hölder integral inequality, we get

$$\left|f(x)-\int_a^b w(t)f(t)dt\right| \tag{14}$$
$$\leqslant\log\frac{x}{a}\left(\int_0^1 W^p\left(x^{1-\tau}a^\tau\right)x^{1-\tau}a^\tau d\tau\right)^{\frac{1}{p}}\left(\int_0^1\left|f'\right|^q\left(x^{1-\tau}a^\tau\right)x^{1-\tau}a^\tau d\tau\right)^{\frac{1}{q}}$$
$$+\log\frac{b}{x}\left(\int_0^1\left(1-W(b^{1-\tau}x^\tau)\right)^p b^{1-\tau}x^\tau d\tau\right)^{\frac{1}{p}}\left(\int_0^1\left|f'\right|^q\left(b^{1-\tau}x^\tau\right)b^{1-\tau}x^\tau d\tau\right)^{\frac{1}{q}}$$
$$\leqslant\log\frac{x}{a}\left(\int_0^1 W^p(x^{1-\tau}a^\tau)x^{1-\tau}a^\tau d\tau\right)^{\frac{1}{p}}\left(\int_0^1\left|f'\right|^{(1-\tau)q}(x)\left|f'\right|^{\tau q}(a)x^{1-\tau}a^\tau d\tau\right)^{\frac{1}{q}}$$
$$+\log\frac{b}{x}\left(\int_0^1(1-W(b^{1-\tau}x^\tau))^p b^{1-\tau}x^\tau d\tau\right)^{\frac{1}{p}}\left(\int_0^1\left|f'\right|^{(1-\tau)q}(b)\left|f'\right|^{\tau q}(x)b^{1-\tau}x^\tau d\tau\right)^{\frac{1}{q}}.$$

By a simple computation, we get

$$\int_0^1 Q^p\left(u^{1-\tau}v^{\tau}\right)u^{1-\tau}v^{\tau}d\tau = \frac{1}{\log\frac{u}{v}}\int_v^u Q^p(t)dt \tag{15}$$

and

$$\int_0^1 A_{v,u}^{\tau}d\tau = \frac{1}{\log A_{v,u}}\left[A_{v,u}-1\right]. \tag{16}$$

If we use (15) and (16) in (14) we get the desired result.

Lastly, we will give a new result for GA-convex functions as following:

THEOREM 5. *Let $I \subset (0,\infty)$ be an interval, $a,b \in I^o$, $a<b$. Let w be a nonnegative integrable function on $[a,b]$ such that $\int_a^b w(x)dx = 1$ and let $W(t) = \int_a^t w(x)dx$. Let $f : I \to \mathbb{R}$ be a function differentiable on I^o. If $|f'|^q$ is GA-convex function on $[a,b]$ for some $q>1$, then for $x \in [a,b]$, following inequality holds*

$$\begin{aligned}
&\left|f(x)-\int_a^b w(t)f(t)dt\right| \\
&\leqslant \log^{\frac{1}{q}}\frac{x}{a}\left(\int_a^x W(t)t^{p-1}dt\right)^{\frac{1}{p}}\left(\left|f'(x)\right|^q\kappa_1+\left|f'(a)\right|^q\kappa_2\right)^{\frac{1}{q}} \\
&\quad+\log^{\frac{1}{q}}\frac{b}{x}\left(\int_x^b (1-W(t))t^{p-1}dt\right)^{\frac{1}{p}}\left(\left|f'(b)\right|^q\kappa_3+\left|f'(x)\right|^q\kappa_4\right)^{\frac{1}{q}},
\end{aligned}$$

where $\frac{1}{p} = 1-\frac{1}{q}$ and

$$\begin{aligned}
\kappa_1 &= \int_a^x\left[\frac{\log\frac{t}{x}}{\log\frac{a}{x}}\left(1-\frac{\log\frac{t}{x}}{2\log\frac{a}{x}}\right)\right]w(t)dt \\
\kappa_2 &= \frac{1}{2}\int_a^x\left(\frac{\log\frac{t}{x}}{\log\frac{a}{x}}\right)^2 w(t)dt \\
\kappa_3 &= (1-W(x))-\int_x^b\left[\frac{\log\frac{t}{b}}{\log\frac{x}{b}}\left(1-\frac{\log\frac{t}{b}}{2\log\frac{x}{b}}\right)\right]w(t)dt \\
\kappa_4 &= (1-W(x))-\frac{1}{2}\int_x^b\left(\frac{\log\frac{t}{b}}{\log\frac{x}{b}}\right)^2 w(t)dt,
\end{aligned}$$

provided that all integrals exist.

Proof. Similar to the proof of the previous theorems, by using Lemma 1, Hölder integral inequality and GA-convexity of $|f'|^q$, one can immediately get the result. We omit the details.

REMARK 3. Results similar to Theorems 2, 3, 4 can also be obtained for GA-convex functions and some applications for special means can be given. It is left to the interested readers.

REFERENCES

[1] A. AGLIĆ ALJINOVIĆ, J. PEČARIĆ, I. PERIĆ, *Estimates of the difference between two weighted integral means via weighted Montgomery identity*, Math. Inequal. Appl. **7** (2004), 315–336.

[2] A. AGLIĆ ALJINOVIĆ AND J. PEČARIĆ, *A discrete weighted Montgomery identity and Ostrowski type inequalities for functions of two variables*, Sarajevo Journal of Mathematics, Vol. **9** (21) (2013), 47–56.

[3] S. S. DRAGOMIR, *Inequalities of Jensen Type for GA-Convex Functions*, RGMIA Research Report Collection, **18** (2015), Article 35.

[4] C. P. NICULESCU, *Convexity according to the geometric mean*, Math. Inequal. Appl., **3** (2) (2000), 155–167.

[5] J. PEČARIĆ, *On the Čebyšev inequality*, Bul. Inst. Politehn. Timisoara, **25** (39) (1980), 5–9.

[6] R. A. SATNOIANU, *Improved GA-convexity inequalities*, Journal of Inequalities in Pure and Applied Mathematics, Volume 3, Issue 5, Article 82, 2002.

[7] X.-M. ZHANG, Y.-M. CHU, AND X.-H. ZHANG, *The Hermite-Hadamard type inequality of GA-convex functions and its application*, Journal of Inequalities and Applications, Volume 2010, Article ID 507560, 11 pages.

[8] T.-Y. ZHANG, A.-P. JI AND F. QI, *Some inequalities of Hermite-Hadamard type for GA-convex functions with applications to means*, Le Matematiche, Vol. LXVIII (2013) – Fasc. I, pp. 229–239.

[9] Z. ZHANG, W. WEI AND J.-R. WANG, *Generalization of Hermite-Hadamard Inequalities Involving Hadamard Fractional Integral Inequalities*, Filomat **29**: 7 (2015), 1515–1524.

(Received January 6, 2016)

Merve Avcı Ardıç
Adıyaman University, Faculty of Science and Arts
Department of Mathematics
Adıyaman, Turkey
e-mail: merveavci@ymail.com

Ahmet Ocak Akdemir
Ağrı İbrahim Çeçen University
Faculty of Science and Letters, Department of Mathematics
Ağrı, Turkey
e-mail: ahmetakdemir@agri.edu.tr

Erhan Set
Ordu University, Faculty of Science and Letters
Department of Mathematics
Ordu, Turkey
e-mail: erhanset@yahoo.com

Mathematical
Inequalities
& Applications
Volume 19, Number 4 (2016), 1169–1180 doi:10.7153/mia-19-86

HERMITE INTERPOLATION AND INEQUALITIES INVOLVING WEIGHTED AVERAGES OF n–CONVEX FUNCTIONS

JOSIP PEČARIĆ AND MARJAN PRALJAK

(*Communicated by C. P. Niculescu*)

Abstract. By using Hermite interpolation we obtain Popoviciu-type inequalities containing sums $\sum_{i=1}^{m} p_i f(x_i)$, where f is an n-convex function. We also give integral analogues of the results, as well as bounds for integral remainders of identities associated with the obtained inequalities.

1. Introduction

Pečarić [5] proved the following result (see also [6, p. 262]):

PROPOSITION 1.1. *The inequality*

$$\sum_{i=1}^{m} p_i f(x_i) \geqslant 0 \tag{1}$$

holds for all convex functions f *if and only if the* m*-tuples* $\mathbf{x} = (x_1, \dots, x_m)$, $\mathbf{p} = (p_1, \dots, p_m) \in \mathbb{R}^m$ *satisfy*

$$\sum_{i=1}^{m} p_i = 0 \quad \textit{and} \quad \sum_{i=1}^{m} p_i |x_i - x_k| \geqslant 0 \textit{ for } k \in \{1, \dots, m\}. \tag{2}$$

Since

$$\sum_{i=1}^{m} p_i |x_i - x_k| = 2 \sum_{i=1}^{m} p_i (x_i - x_k)_+ - \sum_{i=1}^{m} p_i (x_i - x_k),$$

where $y_+ = \max(y, 0)$, it is easy to see that condition (2) is equivalent to

$$\sum_{i=1}^{m} p_i = 0, \quad \sum_{i=1}^{m} p_i x_i = 0 \quad \text{and} \quad \sum_{i=1}^{m} p_i (x_i - x_k)_+ \geqslant 0 \text{ for } k \in \{1, \dots, m-1\}. \tag{3}$$

Mathematics subject classification (2010): 26D15, 26D10.
Keywords and phrases: n-convex functions, Hermite interpolation, Čebyšev functional.
This work has been fully supported by Croatian Science Foundation under the project 5435.

Paper MIA-19-86

Let A denote the linear operator $A(f)=\sum_{i=1}^{m} p_i f(x_i)$, let $w(x,t)=(x-t)_+$ and $x_{(1)}\leqslant x_{(2)}\leqslant\ldots\leqslant x_{(m)}$ be the sequence $\mathbf{x}$ in ascending order. Notice that $A(w(\cdot,x_k))=\sum_{i=1}^{m} p_i(x_i-x_k)_+$. For $t\in[x_{(k)},x_{(k+1)}]$ we have

$$A(w(\cdot,t))=A(w(\cdot,x_{(k)}))+(x_{(k)}-t)\sum_{\{i:x_i>x_{(k)}\}} p_i,$$

so the mapping $t\mapsto A(w(\cdot,t))$ is linear on $[x_{(k)},x_{(k+1)}]$. Furthermore, $A(w(\cdot,x_{(m)})=0$, so condition (3) is equivalent to

$$\sum_{i=1}^{m} p_i=0,\quad \sum_{i=1}^{m} p_i x_i=0 \quad\text{and}\quad \sum_{i=1}^{m} p_i(x_i-t)_+\geqslant 0 \text{ for every } t\in[x_{(1)},x_{(m-1)}]. \tag{4}$$

It turns out that condition (4) is appropriate for extension of Proposition 1.1 to the integral case and the more general class of n-convex functions.

DEFINITION 1.2. The n-th order divided difference of a function $f:I\to\mathbb{R}$, where I is an interval in $\mathbb{R}$, at distinct points $x_0,\ldots,x_n\in I$ is defined recursively (see [6]) by

$$f[x_i]=f(x_i),\quad (i=0,\ldots,n)$$

and

$$f[x_0,\ldots,x_n]=\frac{f[x_1,\ldots,x_n]-f[x_0,\ldots,x_{n-1}]}{x_n-x_0}.$$

The function f is said to be n-convex on I, $n\geqslant 0$, if for all choices of $(n+1)$ distinct points in I, the n-th order divided difference of f satisfies

$$f[x_0,\ldots,x_n]\geqslant 0.$$

The value $f[x_0,\ldots,x_n]$ is independent of the order of the points $x_0,\ldots,x_n$. If $f^{(n)}$ exists, then f is n-convex if and only if $f^{(n)}\geqslant 0$. For $1\leqslant k\leqslant n-2$, a function f is n-convex if and only if $f^{(k)}$ exists and is $(n-k)$-convex.

The following result is due to Popoviciu [7, 8] (see [10, 6] also).

PROPOSITION 1.3. *Let $n\geqslant 2$. Inequality (1) holds for all n-convex functions $f:[a,b]\to\mathbb{R}$ if and only if the m-tuples $\mathbf{x}\in[a,b]^m$, $\mathbf{p}\in\mathbb{R}^m$ satisfy*

$$\sum_{i=1}^{m} p_i x_i^k=0,\quad \textit{for all } k=0,1,\ldots,n-1 \tag{5}$$

$$\sum_{i=1}^{m} p_i(x_i-t)_+^{n-1}\geqslant 0,\quad \textit{for every } t\in[a,b]. \tag{6}$$

In fact, Popoviciu proved a stronger result – it is enough to assume that (6) holds for every $t\in[x_{(1)},x_{(m-n+1)}]$ and then, due to (5), it is automatically satisfied for every $t\in[a,b]$. The integral analogue (see [9, 6]) is given in the next proposition.

PROPOSITION 1.4. *Let $n \geqslant 2$, $p : [\alpha,\beta] \to \mathbb{R}$ and $g : [\alpha,\beta] \to [a,b]$. Then, the inequality*

$$\int_\alpha^\beta p(x) f(g(x))\, dx \geqslant 0 \tag{7}$$

holds for all n-convex functions $f : [a,b] \to \mathbb{R}$ if and only if

$$\begin{aligned} &\int_\alpha^\beta p(x) g(x)^k\, dx = 0, \quad \text{for all } k = 0,1,\dots,n-1 \\ &\int_\alpha^\beta p(x)\,(g(x)-t)_+^{n-1}\, dx \geqslant 0, \quad \text{for every } t \in [a,b]. \end{aligned} \tag{8}$$

In this paper we will derive inequalities of type (1) and (7) for n-convex functions by making use of the Hermite interpolation. Let $-\infty < a \leqslant a_1 < a_2 < \cdots < a_r \leqslant b < \infty$, $r \geqslant 2$. The Hermite interpolation of a function $f \in C^n[a,b]$ is of the form

$$f(x) = P_H(x) + e_H(x)$$

where P_H is the unique polynomial of degree $n-1$, called the Hermite interpolating polynomial of f, satisfying

$$P_H^{(i)}(a_j) = f^{(i)}(a_j), \quad 0 \leqslant i \leqslant k_j, \quad 1 \leqslant j \leqslant r, \quad \sum_{j=1}^r k_j + r = n.$$

The associated error $e_H(x)$ can be represented in terms of the Green's function $G_{H,n}(x,s)$ for the multipoint boundary value problem

$$z^{(n)}(x) = 0, \quad z^{(i)}(a_j) = 0, \quad 0 \leqslant i \leqslant k_j, \quad 1 \leqslant j \leqslant r,$$

that is, the following result holds (see [2]):

THEOREM 1.5. *Let $f \in C^n[a,b]$, and let P_H be its Hermite interpolating polynomial. Then*

$$\begin{aligned} f(x) &= P_H(x) + e_H(x) \\ &= \sum_{j=1}^r \sum_{i=0}^{k_j} H_{ij}(x) f^{(i)}(a_j) + \int_a^b G_{H,n}(x,s) f^{(n)}(s)\, ds, \end{aligned} \tag{9}$$

where H_{ij} are the fundamental polynomials of the Hermite basis defined by

$$H_{ij}(x) = \frac{1}{i!} \frac{w(x)}{(x-a_j)^{k_j+1-i}} \sum_{k=0}^{k_j-i} \frac{1}{k!} \frac{d^k}{dx^k} \Big(\frac{(x-a_j)^{k_j+1}}{w(x)} \Big) \Big|_{x=a_j} (x-a_j)^k, \tag{10}$$

where

$$w(x) = \prod_{j=1}^r (x-a_j)^{k_j+1} \tag{11}$$

and $G_{H,n}$ is the Green's function defined by

$$G_{H,n}(x,s)=\begin{cases}\sum_{j=1}^{l}\sum_{i=0}^{k_j}\frac{(a_j-s)^{n-i-1}}{(n-i-1)!}H_{ij}(x), & s\leqslant x,\\ -\sum_{j=l+1}^{r}\sum_{i=0}^{k_j}\frac{(a_j-s)^{n-i-1}}{(n-i-1)!}H_{ij}(x), & s\geqslant x\end{cases}\tag{12}$$

for all $a_l\leqslant s\leqslant a_{l+1}$, $l=0,1,\dots,r$ ($a_0=a, a_{r+1}=b$).

The following are some special cases of the Hermite interpolation of functions:

(i) $(m,n-m)$ conditions: $r=2$, $a_1=a$, $a_2=b$, $1\leqslant m\leqslant n-1$, $k_1=m-1$ and $k_2=n-m-1$. In this case

$$f(x)=\sum_{i=0}^{m-1}\tau_i(x)f^{(i)}(a)+\sum_{i=0}^{n-m-1}\eta_i(x)f^{(i)}(b)+\int_a^b G_{m,n}(x,s)f^{(n)}(s)ds,$$

where

$$\tau_i(x)=\frac{1}{i!}(x-a)^i\left(\frac{x-b}{a-b}\right)^{n-m}\sum_{k=0}^{m-1-i}\binom{n-m+k-1}{k}\left(\frac{x-a}{b-a}\right)^k,\tag{13}$$

$$\eta_i(x)=\frac{1}{i!}(x-b)^i\left(\frac{x-a}{b-a}\right)^{m}\sum_{k=0}^{n-m-1-i}\binom{m+k-1}{k}\left(\frac{x-b}{a-b}\right)^k\tag{14}$$

and the Green's function $G_{m,n}$ is of the form

$$G_{m,n}(x,s)=\begin{cases}\sum_{j=0}^{m-1}\left[\sum_{p=0}^{m-1-j}\binom{n-m+p-1}{p}\left(\frac{x-a}{b-a}\right)^p\right]\frac{(x-a)^j(a-s)^{n-j-1}}{j!(n-j-1)!}\left(\frac{b-x}{b-a}\right)^{n-m}, & s\leqslant x,\\ -\sum_{i=0}^{n-m-1}\left[\sum_{q=0}^{n-m-1-i}\binom{m+q-1}{q}\left(\frac{b-x}{b-a}\right)^q\right]\frac{(x-b)^i(b-s)^{n-i-1}}{i!(n-i-1)!}\left(\frac{x-a}{b-a}\right)^m, & s\geqslant x\end{cases}\tag{15}$$

(ii) Taylor's two-point condition: $m\in\mathbb{N}$, $n=2m$, $r=2$, $a_1=a$, $a_2=b$ and $k_1=k_2=m-1$. In this case

$$\begin{aligned}f(x)=&\sum_{i=0}^{m-1}\sum_{k=0}^{m-i-1}\binom{m+k-1}{k}\Big[\frac{(x-a)^i}{i!}\left(\frac{x-b}{a-b}\right)^m\left(\frac{x-a}{b-a}\right)^k f^{(i)}(a)\\&+\frac{(x-b)^i}{i!}\left(\frac{x-a}{b-a}\right)^m\left(\frac{x-b}{a-b}\right)^k f^{(i)}(b)\Big]+\int_a^b G_{2T,m}(x,s)f^{(2m)}(s)ds,\end{aligned}$$

where the Green's function $G_{2T,m}$ is of the form

$$G_{2T,m}(x,s)=\frac{(-1)^m}{(2m-1)!}\begin{cases}p^m(x,s)\sum_{k=0}^{m-1}\binom{m+k-1}{k}(x-s)^{m-1-k}q^k(x,s), & s\leqslant x,\\ q^m(x,s)\sum_{k=0}^{m-1}\binom{m+k-1}{k}(s-x)^{m-1-k}p^k(x,s), & x\leqslant s,\end{cases}$$

where $p(x,s)=\frac{(s-a)(b-x)}{(b-a)}$ and $q(x,s)=p(s,x)$.

The following lemma yields the sign of the Green's function (12) on certain intervals (see Lemma 2.3.3, page 75, in [2]).

LEMMA 1.6. *The Green's function $G_{H,n}$ given by (12) and w given by (11) satisfy*

$$\frac{G_{H,n}(x,s)}{w(x)} > 0, \quad \text{for } a_1 \leqslant x \leqslant a_r, \quad a_1 < s < a_r.$$

Integration by parts easily yields that for any function $f \in C^2[a,b]$ the following holds

$$f(x) = \frac{b-x}{b-a}f(a) + \frac{x-a}{b-a}f(b) + \int_a^b G(x,s)f''(s)ds, \tag{16}$$

where the function $G : [a,b] \times [a,b] \to \mathbb{R}$ is the Green's function of the boundary value problem

$$z''(x) = 0, \quad z(a) = z(b) = 0$$

and is given by

$$G(x,s) = \begin{cases} \frac{(x-b)(s-a)}{b-a}, & \text{for } a \leqslant s \leqslant x, \\ \frac{(s-b)(x-a)}{b-a}, & \text{for } x \leqslant s \leqslant b. \end{cases} \tag{17}$$

The function G is continuous, symmetric and convex with respect to both variables x and s.

2. Main results

We will start this section with several identities.

THEOREM 2.1. *Let $-\infty < a \leqslant a_1 < a_2 < \cdots < a_r \leqslant b < \infty$, $r \geqslant 2$, $\sum_{j=1}^r k_j + r = n$, $f \in C^n[a,b]$, $\mathbf{x} \in [a,b]^m$, $\mathbf{p} \in \mathbb{R}^m$ and let H_{ij} and $G_{H,n}$ be given by (10) and (12). Then*

$$\sum_{k=1}^m p_k f(x_k) = \sum_{j=1}^r \sum_{i=0}^{k_j} \sum_{k=1}^m p_k H_{ij}(x_k) f^{(i)}(a_j) + \int_a^b \sum_{k=1}^m p_k G_{H,n}(x_k,s) f^{(n)}(s)\,ds. \tag{18}$$

Proof. By applying identity (9) at x_k, multiplying it by p_k and summing up we obtained the required identity. □

The integral version of the previous theorem is the following:

THEOREM 2.2. *Let $-\infty < a \leqslant a_1 < a_2 < \cdots < a_r \leqslant b < \infty$, $r \geqslant 2$, $\sum_{j=1}^r k_j + r = n$, $f \in C^n[a,b]$, $g : [\alpha,\beta] \to [a,b]$, $p : [\alpha,\beta] \to \mathbb{R}$ and let H_{ij} and $G_{H,n}$ be given by (10) and (12). Then*

$$\int_\alpha^\beta p(x)f(g(x))\,dx = \sum_{j=1}^r \sum_{i=0}^{k_j} f^{(i)}(a_j) \int_\alpha^\beta p(x)H_{ij}(x)\,dx + \int_a^b \left(\int_\alpha^\beta p(x)G_{H,n}(g(x),s)\,dx \right) f^{(n)}(s)\,ds.$$

THEOREM 2.3. *Let* $-\infty < a \leqslant a_1 < a_2 < \cdots < a_r \leqslant b < \infty$, $r \geqslant 2$, $\sum_{j=1}^{r} k_j + r = n-2$, $f \in C^n[a,b]$, $\mathbf{x} \in [a,b]^m$, $\mathbf{p} \in \mathbb{R}^m$ *and let* H_{ij} *and* $G_{H,n-2}$ *be given by (10) and (12). Then*

$$\begin{aligned}\sum_{k=1}^{m} p_k f(x_k) = {} & \frac{f(b)-f(a)}{b-a}\sum_{k=1}^{m} p_k x_k + \frac{bf(a)-af(b)}{b-a}\sum_{k=1}^{m} p_k \\ & + \sum_{j=1}^{r}\sum_{i=0}^{k_j} f^{(i+2)}(a_j)\int_a^b \sum_{k=1}^{m} p_k G(x_k,s) H_{ij}(s)\,ds \\ & + \int_a^b\int_a^b \sum_{k=1}^{m} p_k G(x_k,s) G_{H,n-2}(s,t) f^{(n)}(t)\,dt\,ds. \end{aligned} \tag{19}$$

Proof. Applying identity (16) at x_k, multiplying it by p_k and summing up we obtain

$$\sum_{k=1}^{m} p_k f(x_k) = \frac{f(b)-f(a)}{b-a}\sum_{k=1}^{m} p_k x_k + \frac{bf(a)-af(b)}{b-a}\sum_{k=1}^{m} p_k + \int_a^b \sum_{k=1}^{m} p_k G(x_k,s) f''(s)\,ds. \tag{20}$$

By Theorem 1.5, $f''(s)$ can be expressed as

$$f''(s) = \sum_{j=1}^{r}\sum_{i=0}^{k_j} H_{ij}(s) f^{(i+2)}(a_j) + \int_a^b G_{H,n-2}(s,t) f^{(n)}(t)\,dt. \tag{21}$$

Inserting (21) in (20) we get (19). □

We also state the integral version of the previous theorem.

THEOREM 2.4. *Let* $-\infty < a \leqslant a_1 < a_2 < \cdots < a_r \leqslant b < \infty$, $r \geqslant 2$, $\sum_{j=1}^{r} k_j + r = n-2$, $f \in C^n[a,b]$, $g : [\alpha,\beta] \to [a,b]$, $p : [\alpha,\beta] \to \mathbb{R}$ *and let* H_{ij} *and* $G_{H,n-2}$ *be given by (10) and (12). Then*

$$\begin{aligned}\int_\alpha^\beta p(x) f(g(x))\,dx = {} & \frac{f(b)-f(a)}{b-a}\int_\alpha^\beta p(x) g(x)\,dx + \frac{bf(a)-af(b)}{b-a}\int_\alpha^\beta p(x)\,dx \\ & + \sum_{j=1}^{r}\sum_{i=0}^{k_j} f^{(i+2)}(a_j)\int_a^b \left(\int_\alpha^\beta p(x) G(g(x),s)\,dx\right) H_{ij}(s)\,ds \\ & + \int_a^b\int_a^b \left(\int_\alpha^\beta p(x) G(g(x),s)\,dx\right) G_{H,n-2}(s,t) f^{(n)}(t)\,dt\,ds. \end{aligned}$$

Next we will use the identities proven above to derive inequalities.

THEOREM 2.5. *Let* $-\infty < a \leqslant a_1 < a_2 < \cdots < a_r \leqslant b < \infty$, $r \geqslant 2$, $\sum_{j=1}^{r} k_j + r = n$, $\mathbf{x} \in [a,b]^m$, $\mathbf{p} \in \mathbb{R}^m$ *and let* H_{ij} *and* $G_{H,n}$ *be given by (10) and (12). If* $f : [a,b] \to \mathbb{R}$ *is* n*-convex and*

$$\sum_{k=1}^{m} p_k G_{H,n}(x_k,s) \geqslant 0 \quad \textit{for all } s \in [a,b], \tag{22}$$

then

$$\sum_{k=1}^{m} p_k f(x_k) \geqslant \sum_{j=1}^{r} \sum_{i=0}^{k_j} \sum_{k=1}^{m} p_k H_{ij}(x_k) f^{(i)}(a_j). \tag{23}$$

If the inequality in (22) is reversed, then the inequality in (23) is reversed also.

Proof. If (22) holds, then the second term on the right hand side (18) is nonnegative. □

THEOREM 2.6. *Let $-\infty < a \leqslant a_1 < a_2 < \cdots < a_r \leqslant b < \infty$, $r \geqslant 2$, $\sum_{j=1}^{r} k_j + r = n$, $\mathbf{x} \in [a,b]^m$, $p : [\alpha,\beta] \to \mathbb{R}$ and let H_{ij} and $G_{H,n}$ be given by (10) and (12). If $f : [a,b] \to \mathbb{R}$ is n-convex and*

$$\int_{\alpha}^{\beta} p(x) G_{H,n}(g(x),s)\, dx \geqslant 0 \quad \text{for all } s \in [a,b], \tag{24}$$

then

$$\int_{\alpha}^{\beta} p(x) f(g(x))\, dx \geqslant \sum_{j=1}^{r} \sum_{i=0}^{k_j} f^{(i)}(a_j) \int_{\alpha}^{\beta} p(x) H_{ij}(x)\, dx. \tag{25}$$

If the inequality in (24) is reversed, then the inequality in (25) is reversed also.

THEOREM 2.7. *Let $-\infty < a = a_1 < a_2 < \cdots < a_r = b < \infty$, $r \geqslant 2$, $\sum_{j=1}^{r} k_j + r = n-2$, $\mathbf{x} \in [a,b]^m$, $\mathbf{p} \in \mathbb{R}^m$ and let H_{ij} and $G_{H,n-2}$ be given by (10) and (12). Let $f : [a,b] \to \mathbb{R}$ be n-convex and*

$$\sum_{k=1}^{m} p_k G(x_k,s) \geqslant 0 \quad \text{for all } s \in [a,b], \tag{26}$$

and consider the inequality

$$\begin{aligned} \sum_{k=1}^{m} p_k f(x_k) \geqslant{}& \frac{f(b)-f(a)}{b-a} \sum_{k=1}^{m} p_k x_k + \frac{bf(a)-af(b)}{b-a} \sum_{k=1}^{m} p_k \\ &+ \sum_{j=1}^{r} \sum_{i=0}^{k_j} f^{(i+2)}(a_j) \int_a^b \sum_{k=1}^{m} p_k G(x_k,s) H_{ij}(s)\, ds. \end{aligned} \tag{27}$$

(*i*) *If k_j for $j = 2,\ldots,r$ are odd, then (27) holds.*

(*ii*) *If k_j for $j = 2,\ldots,r-1$ are odd and k_r is even, then the reverse of (27) holds.*

Proof. (*i*) Assume first that $f \in C^n[a,b]$. Due to the assumptions w given by (11) satisfies $w(x) \geqslant 0$ for all x and, hence, by Lemma 1.6, $G_{H,n-2}(s,t) \geqslant 0$ for all $s,t \in [a,b]$. Therefore, the last term on the right hand side of (19) is nonnegative, so inequality (27) holds. The inequality for general f follows since every n-convex function can be obtained, by making use of the Bernstein polynomials, as a uniform limit of n-convex functions with a continuous n-th derivative (see [6]).

(*ii*) Under these assumptions $w(x) \leqslant 0$, so $G_{H,n-2}(s,t) \leqslant 0$. The rest of the proof is the same as in (*i*). □

THEOREM 2.8. *Let* $-\infty < a = a_1 < a_2 < \cdots < a_r = b < \infty$, $r \geqslant 2$, $\sum_{j=1}^{r} k_j + r = n-2$, $g : [\alpha,\beta] \to \mathbb{R}$, $p : [\alpha,\beta] \to \mathbb{R}$ *and let* H_{ij} *be given by (10). Let* $f : [a,b] \to \mathbb{R}$ *be* n*-convex and*

$$\int_\alpha^\beta p(x)G(g(x),s)\,dx \geqslant 0 \quad \textit{for all } \ s \in [a,b],$$

and consider the inequality

$$\int_\alpha^\beta p(x)f(g(x))\,dx \geqslant \frac{f(b)-f(a)}{b-a}\int_\alpha^\beta p(x)g(x)\,dx + \frac{bf(a)-af(b)}{b-a}\int_\alpha^\beta p(x)\,dx$$
$$+\sum_{j=1}^{r}\sum_{i=0}^{k_j} f^{(i+2)}(a_j)\int_a^b\left(\int_\alpha^\beta p(x)G(g(x),s)\,dx\right)H_{ij}(s)\,ds. \quad (28)$$

(*i*) *If* k_j *for* $j = 2,\dots,r$ *are odd, then (28) holds.*

(*ii*) *If* k_j *for* $j = 2,\dots,r-1$ *are odd and* k_r *is even, then the reverse of (28) holds.*

In the case of the $(m, n-m)$ conditions we have the following corollary.

COROLLARY 2.9. *Let* τ_i *and* η_i *be given by (13) and (14) and let* $\mathbf{x} \in [a,b]^m$ *and* $\mathbf{p} \in \mathbb{R}^m$ *be such that (26) holds. Let* $f : [a,b] \to \mathbb{R}$ *be* n*-convex and consider the inequality*

$$\sum_{k=1}^{m} p_k f(x_k) \geqslant \frac{f(b)-f(a)}{b-a}\sum_{k=1}^{m} p_k x_k + \frac{bf(a)-af(b)}{b-a}\sum_{k=1}^{m} p_k$$
$$+\int_a^b\left(\sum_{k=1}^{m} p_k G(x_k,s)\right)\left(\sum_{i=0}^{l-1}\tau_i(s)f^{(i+2)}(a) + \sum_{i=0}^{n-l-1}\eta_i(s)f^{(i+2)}(b)\right)ds. \quad (29)$$

(*i*) *If* $n-l$ *is even, then (29) holds.*

(*ii*) *If* $n-l$ *is odd, then the reverse of (29) holds.*

In the case of Taylor's two point conditions we have the following corollary.

COROLLARY 2.10. *Let* $\mathbf{x} \in [a,b]^m$ *and* $\mathbf{p} \in \mathbb{R}^m$ *be such that (26) holds. Let* $f : [a,b] \to \mathbb{R}$ *be* n*-convex and consider the inequality*

$$\sum_{k=1}^{m} p_k f(x_k) \geqslant \frac{f(b)-f(a)}{b-a}\sum_{k=1}^{m} p_k x_k + \frac{bf(a)-af(b)}{b-a}\sum_{k=1}^{m} p_k + \int_a^b\left(\sum_{k=1}^{m} p_k G(x_k,s)\right)$$
$$\times\left(\sum_{i=0}^{l-1}\sum_{k=0}^{l-i-1}\binom{l+k-1}{k}\left[\frac{(s-a)^i}{i!}\left(\frac{s-b}{a-b}\right)^l\left(\frac{s-a}{b-a}\right)^k f^{(i+2)}(a)\right.\right.$$
$$\left.\left.+\frac{(s-b)^i}{i!}\left(\frac{s-a}{b-a}\right)^l\left(\frac{s-b}{a-b}\right)^k f^{(i+2)}(b)\right]\right)ds. \quad (30)$$

(*i*) *If l is even, then (30) holds.*

(*ii*) *If l is odd, then the reverse of (30) holds.*

THEOREM 2.11. *Let $-\infty < a = a_1 < a_2 < \cdots < a_r = b < \infty$, $r \geqslant 2$, $\sum_{j=1}^{r} k_j + r = n-2$, let $\mathbf{x} \in [a,b]^m$ and $\mathbf{p} \in \mathbb{R}^m$ satisfy (2), and let H_{ij} and $G_{H,n-2}$ be given by (10) and (12). Let $f : [a,b] \to \mathbb{R}$ be n-convex and consider the inequality*

$$\sum_{k=1}^{m} p_k f(x_k) \geqslant \sum_{j=1}^{r} \sum_{i=0}^{k_j} f^{(i+2)}(a_j) \int_a^b \sum_{k=1}^{m} p_k G(x_k,s) H_{ij}(s)\, ds \tag{31}$$

and the function

$$F(x) = \sum_{j=1}^{r} \sum_{i=0}^{k_j} f^{(i+2)}(a_j) \int_a^b G(x,s) H_{ij}(s)\, ds. \tag{32}$$

(*i*) *If k_j for $j = 2,\ldots,r$ are odd, then (31) holds. Furthermore, if the function F is convex, then inequality (1) holds.*

(*ii*) *If k_j for $j = 2,\ldots,r-1$ are odd and k_r is even, then the reverse of (31) holds. Furthermore, if the function F is concave, then the reverse of inequality (1) holds.*

Proof. The function $G(x,s)$ is convex in the first variable, so assumption (26) is satisfied by Proposition 1.1. Now, the claims of the theorem follow from Theorem 2.7 and Proposition 1.1. □

THEOREM 2.12. *Let $-\infty < a = a_1 < a_2 < \cdots < a_r = b < \infty$, $r \geqslant 2$, $\sum_{j=1}^{r} k_j + r = n-2$, let $g : [\alpha,\beta] \to \mathbb{R}$ and $p : [\alpha,\beta] \to \mathbb{R}$ satisfy (8), and let H_{ij} and $G_{H,n-2}$ be given by (10) and (12). Let $f : [a,b] \to \mathbb{R}$ be n-convex and consider the inequality*

$$\int_\alpha^\beta p(x) f(x)\, dx \geqslant \sum_{j=1}^{r} \sum_{i=0}^{k_j} f^{(i+2)}(a_j) \int_a^b \left(\int_\alpha^\beta p(x) G(g(x),s)\, dx \right) H_{ij}(s)\, ds \tag{33}$$

and the function F given by (32).

(*i*) *If k_j for $j = 2,\ldots,r$ are odd, then (33) holds. Furthermore, if the function F is convex, then inequality (7) holds.*

(*ii*) *If k_j for $j = 2,\ldots,r-1$ are odd and k_r is even, then the reverse of (33) holds. Furthermore, if the function F is concave, then the reverse of inequality (7) holds.*

3. Bounds for identities related to the Popoviciu-type inequalities

Let $f,h:[a,b]\to\mathbb{R}$ be two Lebesgue integrable functions. We consider the Čebyšev functional

$$T(f,h)=\frac{1}{b-a}\int_a^b f(x)h(x)\,dx-\left(\frac{1}{b-a}\int_a^b f(x)\,dx\right)\left(\frac{1}{b-a}\int_a^b h(x)\,dx\right).$$

The following results can be found in [4].

PROPOSITION 3.1. *Let $f:[a,b]\to\mathbb{R}$ be a Lebesgue integrable function and $h:[a,b]\to\mathbb{R}$ be an absolutely continuous function with $(\cdot-a)(b-\cdot)[h']^2\in L[a,b]$. Then we have the inequality*

$$|T(f,h)|\leqslant\frac{1}{\sqrt{2}}\left(\frac{1}{b-a}|T(f,f)|\int_a^b(x-a)(b-x)[h'(x)]^2\,dx\right)^{\frac{1}{2}}. \tag{34}$$

The constant $\frac{1}{\sqrt{2}}$ in (34) is the best possible.

PROPOSITION 3.2. *Let $h:[a,b]\to\mathbb{R}$ be a monotonic nondecreasing function and let $f:[a,b]\to\mathbb{R}$ be an absolutely continuous function such that $f'\in L_\infty[a,b]$. Then we have the inequality*

$$|T(f,h)|\leqslant\frac{1}{2(b-a)}\|f'\|_\infty\int_a^b(x-a)(b-x)dh(x). \tag{35}$$

The constant $\frac{1}{2}$ in (35) is the best possible.

For m-tuples $\mathbf{p}=(p_1,\dots,p_m)\in\mathbb{R}^m$, $\mathbf{x}=(x_1,\dots,x_m)\in[a,b]^m$ and the functions G and $G_{H,n}$ given by (17) and (12) denote

$$\delta_1(t)=\sum_{k=1}^m p_kG_{H,n}(x_k,t),\qquad\text{for } t\in[a,b]. \tag{36}$$

$$\delta_2(t)=\int_a^b\sum_{k=1}^m p_kG(x_k,s)G_{H,n-2}(s,t)\,ds,\qquad\text{for } t\in[a,b]. \tag{37}$$

Now, we are ready to state the main results of this section.

THEOREM 3.3. *Let $-\infty<a\leqslant a_1<a_2<\dots<a_r\leqslant b<\infty$, $r\geqslant 2$, let $f:[a,b]\to\mathbb{R}$ be such that $f^{(n)}$ is an absolutely continuous function with $(\cdot-a)(b-\cdot)[f^{(n+1)}]^2\in L[a,b]$, $\mathbf{x}\in[a,b]^m$, $\mathbf{p}\in\mathbb{R}^m$ and let H_{ij}, δ_1 and δ_2 be given by (10), (36) and (37).*

(i) If $\sum_{j=1}^r k_j+r=n$, then

$$\begin{aligned}\sum_{k=1}^m p_kf(x_k)=&\sum_{j=1}^r\sum_{i=0}^{k_j}\sum_{k=1}^m p_kH_{ij}(x_k)f^{(i)}(a_j)\\&+\frac{f^{(n-1)}(b)-f^{(n-1)}(a)}{b-a}\int_a^b\delta_1(s)\,ds+R_n^1(f;a,b),\end{aligned} \tag{38}$$

where the remainder $R_n^1(f;a,b)$ *satisfies the estimation*

$$|R_n^1(f;a,b)| \leqslant \left(\frac{b-a}{2}|T(\delta_1,\delta_1)|\int_a^b (s-a)(b-s)[f^{(n+1)}(s)]^2\,ds\right)^{\frac{1}{2}}. \tag{39}$$

(ii) *If* $\sum_{j=1}^r k_j + r = n-2$, *then*

$$\begin{aligned}\sum_{k=1}^m p_k f(x_k) &= \frac{f(b)-f(a)}{b-a}\sum_{k=1}^m p_k x_k + \frac{bf(a)-af(b)}{b-a}\sum_{k=1}^m p_k \\ &\quad + \sum_{j=1}^r \sum_{i=0}^{k_j} f^{(i+2)}(a_j)\int_a^b \sum_{k=1}^m p_k G(x_k,s)H_{ij}(s)\,ds \\ &\quad + \frac{f^{(n-1)}(b)-f^{(n-1)}(a)}{b-a}\int_a^b \delta_2(s)\,ds + R_n^2(f;a,b),\end{aligned} \tag{40}$$

where the remainder $R_n^2(f;a,b)$ *satisfies the estimation*

$$|R_n^2(f;a,b)| \leqslant \left(\frac{b-a}{2}|T(\delta_2,\delta_2)|\int_a^b (s-a)(b-s)[f^{(n+1)}(s)]^2\,ds\right)^{\frac{1}{2}}.$$

Proof. (i) Applying Proposition 3.1 with $f \to \delta_1$ and $h \to f^{(n)}$ we get

$$\begin{aligned}&\left|\int_a^b \delta_1(s)f^{(n)}(s)\,ds - \frac{1}{b-a}\int_a^b \delta_1(s)\,ds\int_a^b f^{(n)}(s)\,ds\right| \\ &\qquad \leqslant \left(\frac{b-a}{2}|T(\delta_1,\delta_1)|\int_a^b (s-a)(b-s)[f^{(n+1)}(s)]^2\,ds\right)^{\frac{1}{2}}.\end{aligned} \tag{41}$$

From identities (18) and (38) we obtain

$$\int_a^b \delta_1(s)f^{(n)}(s)\,ds = \frac{f^{(n-1)}(b)-f^{(n-1)}(a)}{b-a}\int_a^b \delta_1(s)\,ds + R_n^1(f;a,b),$$

where the estimate (39) follows from (41).

(ii) Analogous as in (i). □

By using Proposition 3.2 we obtain the following Grüss type inequality.

THEOREM 3.4. *Let* $-\infty < a \leqslant a_1 < a_2 < \cdots < a_r \leqslant b < \infty$, $r \geqslant 2$, *let* $\mathbf{x}$, $\mathbf{p}$, H_{ij}, δ_1, δ_2 *and* n *be as in Theorem 3.3 and let* $f:[a,b]\to\mathbb{R}$ *be such that* $f^{(n)}$ *is an absolutely continuous function with* $f^{(n+1)} \geqslant 0$. *Then representations (38) and (40) hold with the remainders* $R_n^i(f;a,b)$, $i=1,2$, *satisfying the bounds*

$$|R_n^i(f;a,b)| \leqslant \|\delta_i'\|_\infty \left[\frac{b-a}{2}\left(f^{(n-1)}(b)+f^{(n-1)}(a)\right) - f^{(2n-2)}(b)+f^{(2n-2)}(a)\right]. \tag{42}$$

Proof. If we apply Proposition 3.2 with $f \to \delta_i$ and $h \to f^{(n)}$ we obtain

$$\left| \int_a^b \delta_i(s) f^{(n)}(s) ds - \frac{1}{b-a} \int_a^b \delta_i(s) ds \int_a^b f^{(n)}(s) ds \right| \leqslant \frac{1}{2} \|\delta_i'\|_\infty \int_a^b (s-a)(b-s) f^{(n+1)}(s) ds.$$

Since

$$\begin{aligned} \int_a^b (s-a)(b-s) f^{(n+1)}(s)\, ds &= \int_a^b (2s-a-b) f^{(n)}(s)\, ds \\ &= (b-a)\left[f^{(n-1)}(b) + f^{(n-1)}(a)\right] - 2\left[f^{(n-2)}(b) - f^{(n-2)}(a)\right], \end{aligned} \tag{43}$$

using (43) and identities (18) or (19) we deduce (42). □

REMARK 3.5. We can construct linear functionals by taking differences of the left and right hand sides of the inequalities from Theorems 2.5, 2.6, 2.7 and 2.8. By using similar methods as in [1, 3] we can prove mean value results for these functionals, as well as construct new families of exponentially convex functions and Cauchy-type means. Then, by using some known properties of exponentially convex functions, we can derive new inequalities and prove monotonicity of the obtained Cauchy-type means analogously as in [1, 3].

REFERENCES

[1] M. ADIL KHAN, N. LATIF, J. PEČARIĆ, *Generalization of majorization theorem*, J. Math. Inequal. **9** (2015), 847–872

[2] R. P. AGARWAL, P. J. Y. WONG, *Error Inequalities in Polynomial Interpolation and Their Applications*, Kluwer Academic Publishers, Dordrecht/Boston/London, 1993.

[3] S. I. BUTT, K. A. KHAN, J. PEČARIĆ, *Popoviciu type inequalities via Green function and generalized Montgomery identity*, Math. Ineq. Appl. **18** (2015), 1519–1538.

[4] P. CERONE AND S. S. DRAGOMIR, *Some new Owstrowski-type bounds for the Čebyšev functional and applications*, J. Math. Inequal., **8** (1) (2014), 159–170.

[5] J. PEČARIĆ, *On Jessen's Inequality for Convex Functions, III*, J. Math. Anal. Appl., **156** (1991), 231–239.

[6] J. E. PEČARIĆ, F. PROSCHAN AND Y. L. TONG, *Convex functions, partial orderings and statistical applications*, Academic Press, New York, 1992.

[7] T. POPOVICIU, *Notes sur les fonctions convexes d'orde supérieur III*, Mathematica (Cluj) **16**, (1940), 74–86.

[8] T. POPOVICIU, *Notes sur les fonctions convexes d'orde supérieur IV*, Disqusitiones Math. **1**, (1940), 163–171.

[9] T. POPOVICIU, *Notes sur les fonctions convexes d'orde supérieur IX*, Bull. Math. Soc. Roumaine Sci. **43**, (1941), 85–141.

[10] T. POPOVICIU, *Les fonctions convexes*, Herman and Cie, Editeurs, Paris 1944.

(Received January 25, 2016)

Josip Pečarić
Faculty Of Textile Technology, University Of Zagreb
Prilaz Baruna Filipovića 28a, 10000 Zagreb, Croatia
e-mail: pecaric@mahazu.hazu.hr

Marjan Praljak
Faculty of Food Technology and Biotechnology
University Of Zagreb
Pierottijeva 6, 10000 Zagreb, Croatia
e-mail: mpraljak@pbf.hr

Mathematical
Inequalities
& Applications
Volume 19, Number 4 (2016), 1181–1192 doi:10.7153/mia-19-87

GENERALIZATIONS OF SHERMAN'S INEQUALITY BY HERMITE'S INTERPOLATING POLYNOMIAL

M. ADIL KHAN, S. IVELIĆ BRADANOVIĆ AND J. PEČARIĆ

(*Communicated by K. Nikodem*)

Abstract. Generalizations of Sherman's inequality for convex functions of higher order are obtained by applying Hermite's interpolating polynomials. The results for particular cases, namely, Lagrange, $(m,n-m)$ and two-point Taylor interpolating polynomials are also cosidered. The Grüss and Ostrowski type inequalities related to these generalizations are given.

1. Introduction

We start with the concept of majorization which is exactly a partial ordering of vectors and determines the degree of similarity between the vector elements.

For fixed $m \geqslant 2$, let $\mathbf{x} = (x_1, \ldots, x_m)$ and $\mathbf{y} = (y_1, \ldots, y_m)$ denote two m-tuples. Let $x_{[1]} \geqslant x_{[2]} \geqslant \ldots \geqslant x_{[m]}$ and $y_{[1]} \geqslant y_{[2]} \geqslant \ldots \geqslant y_{[m]}$ be their ordered components. We say that $\mathbf{x}$ *majorizes* $\mathbf{y}$ or $\mathbf{y}$ is *majorized* by $\mathbf{x}$ and write $\mathbf{y} \prec \mathbf{x}$ if

$$\sum_{i=1}^{k} y_{[i]} \leqslant \sum_{i=1}^{k} x_{[i]}, \quad k = 1, \ldots, m-1, \quad \text{and} \quad \sum_{i=1}^{m} y_i = \sum_{i=1}^{m} x_i. \tag{1}$$

A notation from real vectors may be extended to real matrices. Let $\mathscr{M}_{ml}(\mathbb{R})$ denotes the space of $m \times l$ real matrices. A matrix $\mathbf{A} = (a_{ij}) \in \mathscr{M}_{ml}(\mathbb{R})$ is called *row stochastic* if all of its entries are greater than or equal to zero and the sum of the entries in each row is equal to 1. A square matrix $\mathbf{A} = (a_{ij}) \in \mathscr{M}_{ll}(\mathbb{R})$ is called *double stochastic* if all of its entries are greater than or equal to zero and the sum of the entries in each column and each row is equal to 1.

The majorization theorem, due to Hardy et al (1929 [6]), gives connections with matrix theory (see also [8, p. 333]).

THEOREM 1. *Let* $\mathbf{x}$, $\mathbf{y} \in \mathbb{R}^m$. *Then the following statements are equivalent:*

(i) $\mathbf{y} \prec \mathbf{x}$;

Mathematics subject classification (2010): 26D15.
Keywords and phrases: Majorization, n-convexity, Schur-convexity, Sherman's theorem, Hermite's interpolating polynomial, Chebyshev functional, Grüss type inequalities, Ostrowski type inequalities, exponentially convex functions.
The research of the second and third author has been fully supported by Croatian Science Foundation under the project 5435.

Paper MIA-19-87

(ii) There is a doubly stochastic matrix $\mathbf{A}$ *such that* $\mathbf{y} = \mathbf{x}\mathbf{A}$*;*

(iii) The inequality $\sum_{i=1}^{m} \phi(y_i) \leqslant \sum_{i=1}^{m} \phi(x_i)$ *holds for each convex function* $\phi : \mathbb{R} \to \mathbb{R}$.

S. Sherman [10] obtained the following general result.

THEOREM 2. *Let* $[\alpha,\beta] \subset \mathbb{R}$ *and for fixed* $l,m \in \mathbb{N}$, $l,m \geqslant 2$, *let* $\mathbf{x} \in [\alpha,\beta]^l$, $\mathbf{y} \in [\alpha,\beta]^m$, $\mathbf{u} \in [0,\infty)^l$, $\mathbf{v} \in [0,\infty)^m$ *and*

$$\mathbf{y} = \mathbf{x}\mathbf{A}^T \text{ and } \mathbf{u} = \mathbf{v}\mathbf{A} \tag{2}$$

for some row stochastic matrix $\mathbf{A} \in \mathscr{M}_{ml}(\mathbb{R})$. *Then for every convex function* $\phi : [\alpha,\beta] \to \mathbb{R}$ *we have*

$$\sum_{q=1}^{m} v_q \phi(y_q) \leqslant \sum_{p=1}^{l} u_p \phi(x_p). \tag{3}$$

Sherman obtained this useful generalization replacing the classical concept of majorization $\mathbf{y} \prec \mathbf{x}$ by the notion of weighted majorization (2) for two pairs $(\mathbf{x},\mathbf{u})$ and $(\mathbf{y},\mathbf{v})$, where $\mathbf{x} = (x_1,\ldots,x_l)$ and $\mathbf{y} = (y_1,\ldots,y_m)$ are real vectors and $\mathbf{u} = (u_1,\ldots,u_l)$ and $\mathbf{v} = (v_1,\ldots,v_m)$ are corresponding nonnegative weights. Here $\mathbf{A}^T$ denotes the transpose of a matrix $\mathbf{A}$. In particular, if $m = l$ and $u_p = v_q$ for all $p,q = 1,\ldots,m$, the condition $\mathbf{u} = \mathbf{v}\mathbf{A}$ assures the stochasticity on columns, so in that case we deal with doubly stochastic matrices. Then, as a special case of Sherman's inequality, we get the weighted version of majorization's inequality:

$$\sum_{p=1}^{m} u_p \phi(y_p) \leqslant \sum_{p=1}^{m} u_p \phi(x_p).$$

Denoting $U_m = \sum_{p=1}^{m} u_p$ and putting $y_1 = y_2 = \ldots = y_m = \frac{1}{U_m}\sum_{p=1}^{m} u_p x_p$, we obtain Jensen's inequality in the form

$$\phi\left(\frac{1}{U_m}\sum_{p=1}^{m} u_p x_p\right) \leqslant \frac{1}{U_m}\sum_{p=1}^{m} u_p \phi(x_p).$$

In this paper, we recall generalizations of Sherman's result for convex functions of the higher order. Moreover, we obtain extension to real, not necessary nonnegative weights $\mathbf{u}$, $\mathbf{v}$ and matrix $\mathbf{A}$. For some related results see also [1], [2], [7].

In sequel, we always assume that $[\alpha,\beta] \subset \mathbb{R}$ without having to be emphasized.

The notion of n-convexity was defined in terms of divided differences by Popoviciu [9]. A function $\phi : [\alpha,\beta] \to \mathbb{R}$ is n-convex, $n \geqslant 0$, if its nth order divided differences $[x_0,\ldots,x_n;\phi]$ are nonnegative for all choices of $(n+1)$ distinct points $x_i \in [\alpha,\beta]$, $i = 0,\ldots,n$. Thus, a 0-convex function is nonnegative, a 1-convex function is nondecreasing and a 2-convex function is convex in the usual sense. If $\phi^{(n)}$ exists then ϕ is n-convex iff $\phi^{(n)} \geqslant 0$ (see [8]).

2. Preliminaries

Let $\alpha \leqslant a_1 < a_2 < \ldots < a_r \leqslant \beta$, $(r \geqslant 2)$ be the given points. For $\phi \in C^n([\alpha,\beta])$ $(n \geqslant r)$ a unique polynomial $\rho_H(s)$ of degree $(n-1)$ exists, such that *Hermite conditions* hold:

$$\rho_H^{(i)}(a_j) = \phi^{(i)}(a_j), \quad 0 \leqslant i \leqslant k_j, \quad 1 \leqslant j \leqslant r, \tag{H}$$

where $\sum_{j=1}^{r} k_j + r = n$.

In particular, for $r = n$, $k_j = 0$ for all j, we have *Lagrange conditions*:

$$\rho_L(a_j) = \phi(a_j), \quad 1 \leqslant j \leqslant n.$$

For $r = 2$, $1 \leqslant m \leqslant n-1$, $k_1 = m-1$, $k_2 = n-m-1$, we have *Type* $(m, n-m)$ *conditions*:

$$\rho_{(m,n)}^{(i)}(\alpha) = \phi^{(i)}(\alpha), \quad 0 \leqslant i \leqslant m-1,$$

$$\rho_{(m,n)}^{(i)}(\beta) = \phi^{(i)}(\beta), \quad 0 \leqslant i \leqslant n-m-1.$$

For $n = 2m$, $r = 2$ and $k_1 = k_2 = m-1$, we have *Two-point Taylor conditions*:

$$\rho_{2T}^{(i)}(\alpha) = \phi^{(i)}(\alpha), \quad \rho_{2T}^{(i)}(\beta) = \phi^{(i)}(\beta), \quad 0 \leqslant i \leqslant m-1.$$

The following theorem and remark can be found in [3].

THEOREM 3. *Let $\alpha \leqslant a_1 < a_2 < \ldots < a_r \leqslant \beta$, $(r \geqslant 2)$, be the given points and $\phi \in C^n([\alpha,\beta])$, $(n \geqslant r)$. Let $\rho_H(s)$ be the Hermite inrepolating polynomial. Then*

$$\begin{aligned} \phi(t) &= \rho_H(t) + R_{H,n}(\phi,t) \\ &= \sum_{j=1}^{r}\sum_{i=0}^{k_j} H_{ij}(t)\phi^{(i)}(a_j) + \int_\alpha^\beta G_{H,n}(t,s)\phi^{(n)}(s)ds, \end{aligned} \tag{4}$$

where H_{ij} are fundamental polynomials of the Hermite basis defined by

$$H_{ij}(t) = \frac{1}{i!}\frac{\omega(t)}{(t-a_j)^{k_j+1-i}}\sum_{k=0}^{k_j-i}\frac{1}{k!}\frac{d^k}{dt^k}\left(\frac{(t-a_j)^{k_j+1}}{\omega(t)}\right)\Bigg|_{t=a_j}(t-a_j)^k, \tag{5}$$

where

$$\omega(t) = \prod_{j=1}^{r}(t-a_j)^{k_j+1},$$

and $G_{H,n}(t,s)$ is defined by

$$G_{H,n}(t,s) = \begin{cases} \sum_{j=1}^{l}\sum_{i=0}^{k_j}\frac{(a_j-s)^{n-i-1}}{(n-i-1)!}H_{ij}(t); \; s \leqslant t, \\ -\sum_{j=l+1}^{r}\sum_{i=0}^{k_j}\frac{(a_j-s)^{n-i-1}}{(n-i-1)!}H_{ij}(t); \; s \geqslant t, \end{cases} \tag{6}$$

for all $a_l \leqslant s \leqslant a_{l+1}$; $l = 0,\ldots,r$ with $a_0 = \alpha$ and $a_{r+1} = \beta$.

REMARK 1. For Lagrange conditions, from Theorem 3 we have

$$\phi(t) = \rho_L(t) + R_L(\phi,t)$$

where $\rho_L(t)$ is the Lagrange interpolating polynomial i.e.

$$\rho_L(t) = \sum_{j=1}^{n} \prod_{\substack{k=1\\k\neq j}}^{n} \left(\frac{t-a_k}{a_j-a_k}\right)\phi(a_j)$$

and the remainder $R_L(\phi,t)$ is given by

$$R_L(\phi,t) = \int_\alpha^\beta G_L(t,s)\phi^{(n)}(s)ds$$

with

$$G_L(t,s) = \frac{1}{(n-1)!}\begin{cases} \sum\limits_{j=1}^{l}(a_j-s)^{n-1}\prod\limits_{\substack{k=1\\k\neq j}}^{n}\left(\frac{t-a_k}{a_j-a_k}\right), & s\leqslant t\\ -\sum\limits_{j=l+1}^{n}(a_j-s)^{n-1}\prod\limits_{\substack{k=1\\k\neq j}}^{n}\left(\frac{t-a_k}{a_j-a_k}\right), & s\geqslant t\end{cases} \tag{7}$$

$a_l \leqslant s \leqslant a_{l+1},\ l = 1,2,\ldots,n-1$ with $a_1 = \alpha$ and $a_n = \beta$.

For type $(m,n-m)$ conditions, from Theorem 3 we have

$$\phi(t) = \rho_{(m,n)}(t) + R_{(m,n)}(\phi,t)$$

where $\rho_{(m,n)}(t)$ is $(m,n-m)$ interpolating polynomial, i.e.

$$\rho_{(m,n)}(t) = \sum_{i=0}^{m-1}\tau_i(t)\phi^{(i)}(\alpha) + \sum_{i=0}^{n-m-1}\eta_i(t)\phi^{(i)}(\beta),$$

with

$$\tau_i(t) = \frac{1}{i!}(t-\alpha)^i\left(\frac{t-\beta}{\alpha-\beta}\right)^{n-m}\sum_{k=0}^{m-1-i}\binom{n-m+k-1}{k}\left(\frac{t-\alpha}{\beta-\alpha}\right)^k \tag{8}$$

and

$$\eta_i(t) = \frac{1}{i!}(t-\beta)^i\left(\frac{t-\alpha}{\beta-\alpha}\right)^{m}\sum_{k=0}^{n-m-1-i}\binom{m+k-1}{k}\left(\frac{t-\beta}{\alpha-\beta}\right)^k. \tag{9}$$

and the remainder $R_{(m,n)}(\phi,t)$ is given by

$$R_{(m,n)}(\phi,t) = \int_\alpha^\beta G_{(m,n)}(t,s)\phi^{(n)}(s)ds$$

with

$$G_{(m,n)}(t,s) = \begin{cases} \sum\limits_{j=0}^{m-1}\left[\sum\limits_{p=0}^{m-1-j}\binom{n-m+p-1}{p}\left(\frac{t-\alpha}{\beta-\alpha}\right)^p\right]\frac{(t-\alpha)^j(\alpha-s)^{n-j-1}}{j!(n-j-1)!}\left(\frac{\beta-t}{\beta-\alpha}\right)^{n-m}, & s\leqslant t\\ -\sum\limits_{i=0}^{n-m-1}\left[\sum\limits_{q=0}^{n-m-i-1}\binom{m+q-1}{q}\left(\frac{\beta-t}{\beta-\alpha}\right)^q\frac{(t-\beta)^i(\beta-s)^{n-i-1}}{i!(n-i-1)!}\right]\left(\frac{t-\alpha}{\beta-\alpha}\right)^m, & t\leqslant s.\end{cases} \tag{10}$$

For Type Two-point Taylor conditions, from Theorem 3 we have

$$\phi(t) = \rho_{2T}(t) + R_{2T}(\phi,t)$$

where $\rho_{2T}(t)$ is the two-point Taylor interpolating polynomial i.e,

$$\rho_{2T}(t) = \sum_{i=0}^{m-1}\sum_{k=0}^{m-1-i}\binom{m+k-1}{k}\left[\phi^{(i)}(\alpha)\frac{(t-\alpha)^i}{i!}\left(\frac{t-\beta}{\alpha-\beta}\right)^m\left(\frac{t-\alpha}{\beta-\alpha}\right)^k + \phi^{(i)}(\beta)\frac{(t-\beta)^i}{i!}\left(\frac{t-\alpha}{\beta-\alpha}\right)^m\left(\frac{t-\beta}{\alpha-\beta}\right)^k\right] \tag{11}$$

and the remainder $R_{2T}(\phi,t)$ is given by

$$R_{2T}(\phi,t) = \int_\alpha^\beta G_{2T}(t,s)\phi^{(n)}(s)ds$$

with

$$G_{2T}(t,s) = \begin{cases} \frac{(-1)^m}{(2m-1)!}p^m(t,s)\sum_{j=0}^{m-1}\binom{m-1+j}{j}(t-s)^{m-1-j}q^j(t,s), & s \leqslant t; \\ \frac{(-1)^m}{(2m-1)!}q^m(t,s)\sum_{j=0}^{m-1}\binom{m-1+j}{j}(s-t)^{m-1-j}p^j(t,s), & s \geqslant t; \end{cases} \tag{12}$$

where $p(t,s) = \frac{(s-\alpha)(\beta-t)}{\beta-\alpha}$, $q(t,s) = p(s,t), \forall t,s \in [\alpha,\beta]$.

3. Generalizations of Sherman's inequality

Applying Hermite's interpolating polynomial we obtain a generalization of Sherman's theorem which holds for real, not necessary nonnegative weights $\mathbf{u}$, $\mathbf{v}$ and a matrix $\mathbf{A}$ and without assumption (2).

THEOREM 4. *Let $\alpha \leqslant a_1 < a_2 < \ldots < a_r \leqslant \beta$ $(r \geqslant 2)$ be the given points, $k_j \geqslant 0$, $j = 1,\ldots,r$, with $\sum_{j=1}^{r} k_j + r = n$. Let $\phi \in C^n([\alpha,\beta])$ be n-convex and $\mathbf{x} \in [\alpha,\beta]^l$, $\mathbf{y} \in [\alpha,\beta]^m$, $\mathbf{u} \in \mathbb{R}^l$ and $\mathbf{v} \in \mathbb{R}^m$. If*

$$\sum_{p=1}^{l} u_p G_{H,n}(x_p,s) - \sum_{q=1}^{m} v_q G_{H,n}(y_q,s) \geqslant 0, \quad s \in [\alpha,\beta], \tag{13}$$

then

$$\sum_{p=1}^{l} u_p\phi(x_p) - \sum_{q=1}^{m} v_q\phi(y_q) \geqslant \sum_{p=1}^{l} u_p \sum_{j=1}^{r}\sum_{i=0}^{k_j}\phi^{(i)}(a_j)H_{ij}(x_p) - \sum_{q=1}^{m} v_q \sum_{j=1}^{r}\sum_{i=0}^{k_j}\phi^{(i)}(a_j)H_{ij}(y_q), \tag{14}$$

where $G_{H,n}$ and H_{ij} are defined as in (6) and (5), respectively.

Proof. Since $\phi \in C^n([\alpha,\beta])$, applying Theorem 3 on $\sum_{p=1}^{l} u_p\phi(x_p) - \sum_{q=1}^{m} v_q\phi(y_q)$, we get the identity

$$\sum_{p=1}^{l} u_p\phi(x_p) - \sum_{q=1}^{m} v_q\phi(y_q) = \sum_{j=1}^{r}\sum_{i=0}^{k_j} \phi^{(i)}(a_j)\left[\sum_{p=1}^{l} u_pH_{ij}(x_p) - \sum_{q=1}^{m} v_qH_{ij}(y_q)\right] \tag{15}$$
$$+\int_{\alpha}^{\beta}\left[\sum_{p=1}^{l} u_pG_{H,n}(x_p,s) - \sum_{q=1}^{m} v_qG_{H,n}(y_q,s)\right]\phi^{(n)}(s)ds.$$

Since ϕ is n-convex on $[\alpha,\beta]$, then we have $\phi^{(n)} \geqslant 0$ on $[\alpha,\beta]$. Moreover, the inequality (14) holds. □

Under Sherman's assumptions the following generalizations hold.

THEOREM 5. *Let all the assumptions of Theorem 4 be satisfied. Additionally, let vectors* $\mathbf{u}$, $\mathbf{v}$ *be nonnegative and let (2) holds for some row stochastic matrix* $\mathbf{A} \in \mathscr{M}_{ml}(\mathbb{R})$. *If (14) holds and the function*

$$\bar{F}(\cdot) = \sum_{j=1}^{r}\sum_{i=0}^{k_j} \phi^{(i)}(a_j)H_{ij}(\cdot) \tag{16}$$

is convex on $[\alpha,\beta]$ *then the inequality (3) holds.*

Proof. If (14) holds, the right hand side of (14) can be written in the form

$$\sum_{p=1}^{l} u_p\bar{F}(x_p) - \sum_{q=1}^{m} v_q\bar{F}(y_q),$$

where $\bar{F}$ is defined by (16). If $\bar{F}$ is convex, then by Sherman's theorem we have

$$\sum_{p=1}^{l} u_p\bar{F}(x_p) - \sum_{q=1}^{m} v_q\bar{F}(y_q) \geqslant 0,$$

i.e. the right-hand side of (14) is nonnegative, so (3) immediately follows. □

By using Lagrange conditions we get the following generalization of Sherman's theorem.

COROLLARY 1. *Let* $\alpha \leqslant a_1 < a_2 < \ldots < a_n \leqslant \beta$ *(*$n \geqslant 2$*) be the given points and* $\phi \in C^n([\alpha,\beta])$ *be* n*-convex. Let* $\mathbf{x} \in [\alpha,\beta]^l$, $\mathbf{y} \in [\alpha,\beta]^w$, $\mathbf{u} \in [0,\infty)^l$ *and* $\mathbf{v} \in [0,\infty)^w$ *be such that (2) holds for some row stochastic matrix* $\mathbf{A} \in \mathscr{M}_{wl}(\mathbb{R})$.

(i) If

$$\sum_{p=1}^{l} u_pG_L(x_p,s) - \sum_{q=1}^{w} v_qG_L(y_q,s) \geqslant 0, \quad s \in [\alpha,\beta],$$

then

$$\sum_{p=1}^{l} u_p\phi(x_p) - \sum_{q=1}^{w} v_q\phi(y_q) \tag{17}$$
$$\geqslant \sum_{p=1}^{l} u_p \sum_{j=1}^{n} \phi(a_j) \prod_{\substack{u=1\\u\neq j}}^{n} \left(\frac{x_p - a_u}{a_j - a_u}\right) - \sum_{q=1}^{w} v_q \sum_{j=1}^{n} \phi(a_j) \prod_{\substack{u=1\\u\neq j}}^{n} \left(\frac{y_q - a_u}{a_j - a_u}\right),$$

where G_L is defined as in (7).

(ii) If (17) holds and the function

$$\tilde{F}(\cdot) = \sum_{j=1}^{n} \phi(a_j) \prod_{\substack{u=1\\u\neq j}}^{n} \left(\frac{\cdot - a_u}{a_j - a_u}\right)$$

is convex on $[\alpha,\beta]$ then

$$\sum_{q=1}^{w} v_q\phi(y_q) \leqslant \sum_{p=1}^{l} u_p\phi(x_p).$$

By using type $(m, n-m)$ conditions we can give the following result.

COROLLARY 2. *Let $n \geqslant 2$, $1 \leqslant m \leqslant n-1$ and $\phi \in C^n([\alpha,\beta])$ be n-convex. Let $\mathbf{x} \in [\alpha,\beta]^l$, $\mathbf{y} \in [\alpha,\beta]^w$, $\mathbf{u} \in [0,\infty)^l$ and $\mathbf{v} \in [0,\infty)^w$ be such that (2) holds for some row stochastic matrix $\mathbf{A} \in \mathscr{M}_{wl}(\mathbb{R})$.*

(i) If

$$\sum_{p=1}^{l} u_p G_{(m,n)}(x_p,s) - \sum_{q=1}^{w} v_q G_{(m,n)}(y_q,s) \geqslant 0, \quad s \in [\alpha,\beta],$$

then

$$\sum_{p=1}^{l} u_p\phi(x_p) - \sum_{q=1}^{w} v_q\phi(y_q) \geqslant \sum_{p=1}^{l} u_p \left(\sum_{i=0}^{m-1} \tau_i(x_p)\phi^{(i)}(\alpha) + \sum_{i=0}^{n-m-1} \eta_i(x_p)\phi^{(i)}(\beta)\right)$$
$$- \sum_{q=1}^{w} v_q \left(\sum_{i=0}^{m-1} \tau_i(y_q)\phi^{i}(\alpha) + \sum_{i=0}^{n-m-1} \eta_i(y_q)\phi^{(i)}(\beta)\right), \tag{18}$$

where τ_i, η_i and $G_{(m,n)}$ are defined as in (8), (9) and (10), respectively.

(ii) If (18) holds and the function

$$\hat{F}(\cdot) = \sum_{i=0}^{m-1} \tau_i(\cdot)\phi^{(i)}(\alpha) + \sum_{i=0}^{n-m-1} \eta_i(\cdot)\phi^{(i)}(\beta)$$

is convex on $[\alpha,\beta]$ *then*

$$\sum_{q=1}^{u} v_q\phi(y_q) \leqslant \sum_{p=1}^{w} u_p\phi(x_p).$$

By using Two-point Taylor conditions we can give the following result.

COROLLARY 3. *Let* $m \geqslant 1$ *and* $\phi \in C^{2m}([\alpha,\beta])$ *be* $2m$*-convex. Let* $\mathbf{x} \in [\alpha,\beta]^l$, $\mathbf{y} \in [\alpha,\beta]^w$, $\mathbf{u} \in [0,\infty)^l$ *and* $\mathbf{v} \in [0,\infty)^w$ *be such that (2) holds for some row stochastic matrix* $\mathbf{A} \in \mathscr{M}_{wl}(\mathbb{R})$.

(i) If

$$\sum_{p=1}^{l} u_p G_{2T}(x_p,s) - \sum_{q=1}^{w} v_q G_{2T}(y_q,s) \geqslant 0, \quad s \in [\alpha,\beta],$$

then

$$\sum_{p=1}^{l} u_p\phi(x_p) - \sum_{q=1}^{w} v_q\phi(y_q) \geqslant \sum_{p=1}^{l} u_p\rho_{2T}(x_p) - \sum_{q=1}^{w} v_q\rho_{2T}(y_q), \tag{19}$$

where ρ_{2T} *and* G_{2T} *are defined as in (11) and (12), respectively.*

(ii) Moreover, if the function ρ_{2T} *is convex on* $[\alpha,\beta]$, *then*

$$\sum_{q=1}^{w} v_q\phi(y_q) \leqslant \sum_{p=1}^{l} u_p\phi(x_p).$$

REMARK 2. Motivated by the inequality (14), under the assumptions of Theorem 4, we define the linear functional $A : C^n([\alpha,\beta]) \to \mathbb{R}$ by

$$\begin{aligned} A(\phi) = &\sum_{p=1}^{l} u_p\phi(x_p) - \sum_{q=1}^{m} v_q\phi(y_q) \\ &- \sum_{j=1}^{r}\sum_{i=0}^{k_j} \phi^{(i)}(a_j)\left[\sum_{p=1}^{l} u_p H_{ij}(x_p) - \sum_{q=1}^{m} v_q H_{ij}(y_q)\right]. \end{aligned} \tag{20}$$

Then for every n-convex functions $\phi \in C^n([\alpha,\beta])$ we have $A(\phi) \geqslant 0$. Using the linearity and positivity of this functional we may derive corresponding mean-value theorems applying the same method as given in [2]. Moreover, we could produce new classes of exponentially convex functions and as outcome we get new means of the Cauchy type. Here we also refer to [7] with related results.

4. Grüss and Ostrowski type inequalities

P. L. Chebyshev [5] obtained the following inequality

$$|T(f,g)| \leqslant \frac{1}{12}(b-a)^2 \|f'\|_\infty \|g'\|_\infty$$

where $f,g:[\alpha,\beta]\to\mathbb{R}$ are absolutely continuous functions whose derivatives f' and g' are bounded and $T(f,g)$ is so-called Chebyshev functional defined as

$$T(f,g):=\frac{1}{\beta-\alpha}\int_\alpha^\beta f(t)g(t)dt-\frac{1}{\beta-\alpha}\int_\alpha^\beta f(t)dt\cdot\frac{1}{\beta-\alpha}\int_\alpha^\beta g(t)dt. \tag{21}$$

Here $\|\cdot\|_\infty$ denotes the norm in $L_\infty[\alpha,\beta]$, the space of essentially bounded functions on $[\alpha,\beta]$, defined by $\|f\|_\infty=\underset{t\in[\alpha,\beta]}{ess\sup}|f(t)|$. We also use notation $\|\cdot\|_p$, $p\geqslant 1$, for L_p norm.

P. Cerone and S. S. Dragomir [4], considering the Chebyshev functional (21), obtained the following two related results.

THEOREM 6. *Let $f:[\alpha,\beta]\to\mathbb{R}$ be Lebesgue integrable and $g:[\alpha,\beta]\to\mathbb{R}$ be absolutely continuous with $(\cdot-\alpha)(\beta-\cdot)(g')^2\in L_1[\alpha,\beta]$. Then*

$$|T(f,g)|\leqslant\frac{1}{\sqrt{2}}[T(f,f)]^{\frac{1}{2}}\frac{1}{\sqrt{\beta-\alpha}}\left(\int_\alpha^\beta(x-\alpha)(\beta-x)[g'(x)]^2dx\right)^{\frac{1}{2}}. \tag{22}$$

The constant $\frac{1}{\sqrt{2}}$ in (22) is the best possible.

THEOREM 7. *Let $g:[\alpha,\beta]\to\mathbb{R}$ be monotonic nondecreasing and $f:[\alpha,\beta]\to\mathbb{R}$ be absolutely continuous with $f'\in L_\infty[\alpha,\beta]$. Then*

$$|T(f,g)|\leqslant\frac{1}{2(\beta-\alpha)}\left\|f'\right\|_\infty\int_\alpha^\beta(x-\alpha)(\beta-x)dg(x). \tag{23}$$

The constant $\frac{1}{2}$ in (23) is the best possible.

In following results we consider the function $\mathscr{B}:[\alpha,\beta]\to\mathbb{R}$, defined under assumptions of Theorem 4, by

$$\mathscr{B}(s)=\sum_{p=1}^{l}u_pG_{H,n}(x_p,s)-\sum_{q=1}^{m}v_qG_{H,n}(y_q,s), \tag{24}$$

where $\mathbf{x}\in[\alpha,\beta]^l$, $\mathbf{y}\in[\alpha,\beta]^m$, $\mathbf{u}\in\mathbb{R}^l$, $\mathbf{v}\in\mathbb{R}^m$ and $G_{H,n}$ is defined as in (6).

THEOREM 8. *Let $\alpha\leqslant a_1<a_2<\ldots<a_r\leqslant\beta$ $(r\geqslant 2)$ be the given points, $k_j\geqslant 0$, $j=1,\ldots,r$, with $\sum_{j=1}^{r}k_j+r=n$. Let $\phi:[\alpha,\beta]\to\mathbb{R}$ be such that $\phi^{(n)}$ is an absolutely continuous on $[\alpha,\beta]$ with $(\cdot-\alpha)(\beta-\cdot)(\phi^{(n+1)})^2\in L_1[\alpha,\beta]$. Let $\mathbf{x}\in[\alpha,\beta]^l$, $\mathbf{y}\in[\alpha,\beta]^m$, $\mathbf{u}\in\mathbb{R}^l$, $\mathbf{v}\in\mathbb{R}^m$ and H_{ij} and $\mathscr{B}$ be defined as in (5) and (24), respectively.*

Then the remainder $R(\phi;\alpha,\beta)$ *defined by*

$$\begin{aligned} R(\phi;\alpha,\beta) = &\sum_{p=1}^{l} u_p\phi(x_p) - \sum_{q=1}^{m} v_q\phi(y_q) \\ &- \sum_{j=1}^{r}\sum_{i=0}^{k_j} \phi^{(i)}(a_j)\left[\sum_{p=1}^{l} u_p H_{ij}(x_p) - \sum_{q=1}^{m} v_q H_{ij}(y_q)\right] \\ &- \frac{\phi^{(n-1)}(\beta)-\phi^{(n-1)}(\alpha)}{\beta-\alpha}\int_\alpha^\beta \mathscr{B}(s)ds \end{aligned} \tag{25}$$

satisfies the estimation

$$|R(\phi;\alpha,\beta)| \leqslant \frac{\sqrt{\beta-\alpha}}{\sqrt{2}}[T(\mathscr{B},\mathscr{B})]^{\frac{1}{2}}\left(\int_\alpha^\beta (s-\alpha)(\beta-s)[\phi^{(n+1)}(s)]^2 ds\right)^{\frac{1}{2}}. \tag{26}$$

Proof. Comparing (15) and (25) we have

$$\begin{aligned} R(\phi;\alpha,\beta) &= \int_\alpha^\beta \mathscr{B}(s)\phi^{(n)}(s)ds - \frac{\phi^{(n-1)}(\beta)-\phi^{(n-1)}(\alpha)}{\beta-\alpha}\int_\alpha^\beta \mathscr{B}(s)ds \\ &= \int_\alpha^\beta \mathscr{B}(s)\phi^{(n)}(s)ds - \frac{1}{\beta-\alpha}\int_\alpha^\beta \phi^{(n)}ds\int_\alpha^\beta \mathscr{B}(s)ds = (\beta-\alpha)T(\mathscr{B},\phi^{(n)}). \end{aligned}$$

Applying Theorem 6 on the functions $\mathscr{B}$ and $\phi^{(n)}$ we obtain (26). □

Using Theorem 7 we obtain the Grüss type inequality.

THEOREM 9. *Let* $\alpha \leqslant a_1 < a_2 < \ldots < a_r \leqslant \beta$ *(*$r \geqslant 2$*) be the given points,* $k_j \geqslant 0$, $j = 1,\ldots,r$, *with* $\sum_{j=1}^{r} k_j + r = n$. *Let* $\phi \in C^n([\alpha,\beta])$ *be such that* $\phi^{(n+1)} \geqslant 0$ *on* $[\alpha,\beta]$ *and* $\mathbf{x} \in [\alpha,\beta]^l$, $\mathbf{y} \in [\alpha,\beta]^m$, $\mathbf{u} \in \mathbb{R}^l$, $\mathbf{v} \in \mathbb{R}^m$ *and* H_{ij} *and* $\mathscr{B}$ *be defined as in (5) and (24), respectively. Then the remainder* $R(\phi;\alpha,\beta)$ *defined by (25) satisfies the estimation*

$$|R(\phi;\alpha,\beta)| \leqslant \|\mathscr{B}'\|_\infty\left[\frac{\phi^{(n-1)}(\beta)+\phi^{(n-1)}(\alpha)}{2} - \frac{\phi^{(n-2)}(\beta)-\phi^{(n-2)}(\alpha)}{\beta-\alpha}\right]. \tag{27}$$

Proof. Since $R(\phi;\alpha,\beta) = (\beta-\alpha)T(\mathscr{B},\phi^{(n)})$, applying Theorem 7 on the functions $\mathscr{B}$ and $\phi^{(n)}$ we obtain (27). □

We present the Ostrowski type inequality related to generalizations of Sherman's inequality.

THEOREM 10. *Let $\alpha \leqslant a_1 < a_2 < \ldots < a_r \leqslant \beta$ $(r \geqslant 2)$ be the given points, $k_j \geqslant 0$, $j = 1,\ldots,r$, with $\sum_{j=1}^{r} k_j + r = n$. Let $\phi \in C^n([\alpha,\beta])$ and $\mathbf{x} \in [\alpha,\beta]^l$, $\mathbf{y} \in [\alpha,\beta]^m$, $\mathbf{u} \in \mathbb{R}^l$ and $\mathbf{v} \in \mathbb{R}^m$. Let $1 \leqslant p,q \leqslant \infty$, $1/p + 1/q = 1$ and $\left|\phi^{(n)}\right|^p \in L_p[\alpha,\beta]$. Then*

$$\left|\sum_{p=1}^{l} u_p\phi(x_p) - \sum_{q=1}^{m} v_q\phi(y_q) - \sum_{j=1}^{r}\sum_{i=0}^{k_j} \phi^{(i)}(a_j)\left[\sum_{p=1}^{l} u_p H_{ij}(x_p) - \sum_{q=1}^{m} v_q H_{ij}(y_q)\right]\right| \leqslant \left\|\phi^{(n)}\right\|_p \|\mathscr{B}\|_q, \tag{28}$$

where H_{ij} and $\mathscr{B}$ are defined as in (5) and (24), respectively.

The constant $\|\mathscr{B}\|_q$ is sharp for $1 < p \leqslant \infty$ and the best possible for $p = 1$.

Proof. Under ussumption of theorem the identity (15) holds. Applying the well-known Hölder inequality to (15), we have

$$\begin{aligned}
&\left|\sum_{p=1}^{l} u_p\phi(x_p) - \sum_{q=1}^{m} v_q\phi(y_q) - \sum_{j=1}^{r}\sum_{i=0}^{k_j} \phi^{(i)}(a_j)\left[\sum_{p=1}^{l} u_p H_{ij}(x_p) - \sum_{q=1}^{m} v_q H_{ij}(y_q)\right]\right| \\
&= \left|\int_\alpha^\beta \left[\sum_{p=1}^{l} u_p G_{H,n}(x_p,s) - \sum_{q=1}^{m} v_q G_{H,n}(y_q,s)\right]\phi^{(n)}(s)ds\right| \\
&= \left|\int_\alpha^\beta \mathscr{B}(s)\phi^{(n)}(s)ds\right| \leqslant \left\|\phi^{(n)}\right\|_p \left(\int_\alpha^\beta |\mathscr{B}(s)|^q ds\right)^{\frac{1}{q}}
\end{aligned}$$

The proof of the sharpness is analog to one in proof of Theorem 11 in [2]. □

Acknowledgement. The authors would like to thank the editor and referees for the valuable comments and suggestions on the manuscript.

REFERENCES

[1] M. ADIL KHAN, N. LATIF AND J. PEČARIĆ, *Generalization of majorization theorem*, J. Math. Inequal., **9**, 3 (2015), 847–872.

[2] RAVI P. AGARWAL, S. IVELIĆ BRADANOVIĆ, J. PEČARIĆ, *Generalizations of Sherman's inequality by Lidstone's interpolating polynomial*, J. Inequal. Appl., 6, **2016** (2016).

[3] RAVI P. AGARWAL, P. J. Y. WONG, *Error Inequalities in Polynomial Interpolation and their Applications*, Kluwer Academic Publisher, Dordrecht, 1993.

[4] P. CERONE, S. S. DRAGOMIR, *Some new Ostrowski-type bounds for the Čebyšev functional and applications*, J. Math. Inequal., **8**, 1 (2014), 159–170.

[5] P. L. CHEBYSHEV, *Sur les expressions approximatives des integrales definies par les autres prises entre les mémes limites*, Proc. Math. Soc. Charkov, **2**, (1882) 93–98.

[6] G. H. HARDY, J. E. LITTLEWOOD, G. PÓLYA, *Inequalities*, Cambridge University Press, 2nd ed., Cambridge 1952.

[7] S. IVELIĆ BRADANOVIĆ, J. PEČARIĆ, *Generalizations of Sherman's inequality*, Per. Math. Hung. to appear.

[8] J. E. PEČARIĆ, F. PROSCHAN, Y. L. TONG, *Convex Functions, Partial Orderings, and Statistical Applications*, Academic Press, New York, 1992.

[9] T. POPOVICIU, *Sur l'approximation des fonctions convexes d'ordre superier*, Mathematica, **10**, (1934), 49–54.

[10] S. SHERMAN, *On a theorem of Hardy, Littlewood, Pólya and Blackwell*, Proc. Nat. Acad. Sci. USA, **37**, 1 (1957), 826–831.

(Received January 26, 2016)

Muhammad Adil Khan
Department of Mathematics, University of Peshawar
Peshawar 25000, Pakistan
e-mail: adilswati@gmail.com

S. Ivelić Bradanović
Faculty of Civil Engineering, Architecture and Geodesy
University of Split
Matice hrvatske 15, 21000 Split, Croatia
e-mail: sivelic@gradst.hr

Josip Pečarić
Faculty of Textile Technology, University of Zagreb
Prilaz Baruna Filipovića 30, 10000 Zagreb, Croatia
e-mail: pecaric@hazu.hr

Mathematical
Inequalities
& Applications
Volume 19, Number 4 (2016), 1193–1202 doi:10.7153/mia-19-88

ONE PROOF OF THE GHEORGHIU INEQUALITY

BOŽIDAR IVANKOVIĆ

(*Communicated by K. Nikodem*)

Abstract. The Gheorghiu inequality is a reverse Hölder's inequality. In this article, the Gheorghiu inequality is proven by using a property of a two – variable function. Original Gheorghiu's result is presented and compared with obtained result.

1. Introduction and preliminaries

A class of real function defined on a set Ω is noted with $\mathscr{L}$ if for any pair $f,g \in \mathscr{L}$ their linear combination $\alpha f + \beta g \in \mathscr{L}$ for all $\alpha,\beta \in \mathbb{R}$ and if $\mathscr{L}$ consists constant functions.

A linear mean $\mathbf{E}$ is a linear functional defined on $\mathscr{L}$ with property that if $f(t) \geqslant 0$ on Ω, then $\mathbf{E}(f) \geqslant 0$ and with property that $\mathbf{E}(1) = 1$. The function noted by 1 presents the basic constant function with $1(t) = 1$ for every $t \in \Omega$.

Jensen's inequality and McShane's extension are given according the [8].

THEOREM 1. (Jensen) *Let $g_1 \in \mathscr{L}$, such that $g_1(t) \in [a,A] \subset \mathbb{R}$ for all $t \in \Omega$. Let $\mathbf{E}$ be a linear mean on $\mathscr{L}$. If $\varphi : [a,A] \to \mathbb{R}$ is a continuous concave function, then $\varphi(g_1) \in \mathscr{L}$, $\mathbf{E}(\varphi(g_1)) \in [a,A]$ and*

$$\mathbf{E}(\varphi(g_1)) \leqslant \varphi(\mathbf{E}(g_1)).$$

THEOREM 2. (McShane, case on rectangular) *Let $g_1, g_2 \in \mathscr{L}$ such that $(g_1(t), g_2(t)) \in D = [a,A] \times [b,B]$ for all $t \in \Omega$. Let $\mathbf{E}$ be a linear mean on $\mathscr{L}$. If $\varphi : D \to \mathbb{R}$ is a continuous concave function, then $\varphi(g_1,g_2) \in \mathscr{L}$, $(\mathbf{E}(g_1), \mathbf{E}(g_2)) \in D$ and*

$$\mathbf{E}(\varphi(g_1,g_2) \leqslant \varphi(\mathbf{E}(g_1), \mathbf{E}(g_2)). \tag{1}$$

In [6] author proved Theorem 3 that characterized the right hand side in the McShane inequality for a measure space.

Mathematics subject classification (2010): 26D15, 26D99.
Keywords and phrases: Convex functions, linear functionals, Jensen's inequality, reverse Jessen's inequality, reverse Hölder's inequality, Gheorghiu inequality.
This work has been fully supported by Croatian Science Foundation under the project 5435.

Paper MIA-19-88

THEOREM 3. *Let* (Ω,Σ,μ) *be a measure space such that* $0<\mu(A)<1<\mu(B)<\infty$ *for some* $A,B\in\Sigma$ *and let bijections* $\varphi_1,\varphi_2,\psi_1,\psi_2:(0,\infty)\to(0,\infty)$ *be such that* $\dfrac{\psi_1\circ\varphi_1(t)}{t}\leqslant c\leqslant\dfrac{t}{\psi_2\circ\varphi_2(t)}$. *If*

$$\int_\Omega xy\,d\mu\leqslant\psi_1\left(\int\Omega(x)\varphi_1\circ|x|\,d\mu\right)\psi_2\left(\int\Omega(y)\varphi_2\circ|y|\,d\mu\right)$$

for all nonnegative μ*-integrable simple functions* $x,y:\Omega\to\mathbf{R}$ *(where* $\Omega(x)$ *stands for the support of* x*), then there exists a real* $p>1$ *such that*

$$\frac{\varphi_1(t)}{\varphi_1(1)}=t^p,\quad\frac{\psi_1(t)}{\psi_1(1)}=t^{1/p},\quad\frac{\varphi_2(t)}{\varphi_2(1)}=t^q,\quad\frac{\psi_2(t)}{\psi_2(1)}=t^{1/q},\quad t>0,$$

where $\dfrac{1}{p}+\dfrac{1}{q}=1$.

A part of Csiszár and Móri conversion for (1) is given below. Complete conversion is given in [1]

THEOREM 4. *Let* $\varphi:D\to\mathbb{R}$ *be a concave function and suppose that* $\varphi(a,b)+\varphi(A,B)-\varphi(A,b)-\varphi(a,B)\geqslant 0$. *If* $(B-b)\mathbf{E}(g_1)+(A-a)\mathbf{E}(g_2)\leqslant AB-ab$, *then* $\lambda\mathbf{E}(g_1)+\mu\mathbf{E}(g_2)+\nu\leqslant\mathbf{E}(\varphi(g_1,g_2))\leqslant\varphi(\mathbf{E}(g_1),\mathbf{E}(g_2))$, *with*

$$\lambda=\frac{\varphi(A,b)-\varphi(a,b)}{A-a},\qquad\mu=\frac{\varphi(a,B)-\varphi(a,b)}{B-b},$$

and

$$\nu=\frac{AB-ab}{(A-a)(B-b)}\varphi(a,b)-\frac{b}{B-b}\varphi(a,B)-\frac{a}{A-a}\varphi(A,b).$$

More general conversion and refinement in Theorem 5 is proven in [2] by considering the functions

$$M_{ij}(t,s)=\frac{(\lambda_i+\lambda_j)t+(\mu_i+\mu_j)s+\nu_i+\nu_j}{2}+\frac{|(\lambda_i-\lambda_j)t+(\mu_i-\mu_j)s+\nu_i-\nu_j|}{2}$$

and

$$m_{ij}(t,s)=\frac{(\lambda_i+\lambda_j)t+(\mu_i+\mu_j)s+\nu_i+\nu_j}{2}-\frac{|(\lambda_i-\lambda_j)t+(\mu_i-\mu_j)s+\nu_i-\nu_j|}{2}.$$

Given coefficients are $\lambda_1=\lambda_4=\dfrac{\varphi(A,b)-\varphi(a,b)}{A-a}$, $\mu_1=\mu_3=\dfrac{\varphi(a,B)-\varphi(a,b)}{B-b}$; $\lambda_2=\lambda_3=\dfrac{\varphi(A,B)-\varphi(a,B)}{A-a}$; $\mu_2=\mu_4=\dfrac{\varphi(A,B)-\varphi(A,b)}{B-b}$; $\nu_1=\varphi(a,b)-\lambda_1a-\mu_1b$; $\nu_2=\varphi(A,B)-\lambda_2A-\mu_2B$; $\nu_3=\varphi(a,B)-\lambda_3a-\mu_3B$ and $\nu_4=\varphi(A,b)-\lambda_4A-\mu_4b$.

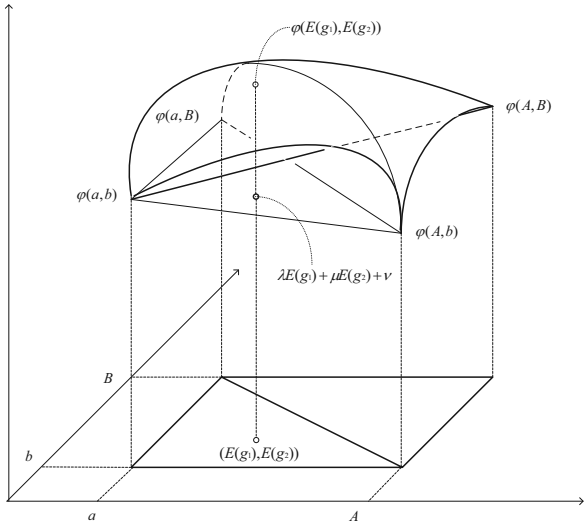

Figure 1: *Conversion by Csiszár and Móri*

THEOREM 5. *Suppose $\varphi : D \to \mathbb{R}$ is a continuous and concave function. If $\varphi(a,b)+\varphi(A,B)-\varphi(A,b)-\varphi(a,B) \geqslant 0$, then*

$$M_{12}(\mathbf{E}(g_1),\mathbf{E}(g_2)) \leqslant \mathbf{E}(m_{34}(g_1,g_2)) \leqslant \mathbf{E}(\varphi(g_1,g_2)) \leqslant \varphi(\mathbf{E}(g_1),\mathbf{E}(g_2)). \tag{2}$$

If $\varphi(a,b)+\varphi(A,B)-\varphi(A,b)-\varphi(a,B) \leqslant 0$, then

$$M_{34}(\mathbf{E}(g_1),\mathbf{E}(g_2)) \leqslant \mathbf{E}(m_{12}(g_1,g_2)) \leqslant \mathbf{E}(\varphi(g_1,g_2)) \leqslant \varphi(\mathbf{E}(g_1),\mathbf{E}(g_2)).$$

2. Main result and applications

Conversion of (1) by a two-variable function is given. Under the special conditions the Georhiu-type inequality is proven. The following general result is given in [4].

THEOREM 6. (General result) *Let $\varphi,\psi : D \to \mathbb{R}$ be continuous, let φ be concave and for $g_1,g_2 \in \mathscr{L}$ let us assume that $(g_1(t),g_2(t)) \in D$ for all $t \in \Omega$. Let E be a linear mean on $\mathscr{L}$. Suppose that $\varphi(D) \subseteq U$ and $\psi(D) \subseteq V$ and suppose that $\mathscr{F} : U \times V \subseteq \mathbb{R}^2 \to \mathbb{R}$ is increasing in the first variable.*

If $\varphi(a,b)+\varphi(A,B)-\varphi(A,b)-\varphi(a,B) \geqslant 0$, then

$$\min_{(t,s)\in D} \mathscr{F}\left(M_{12}(t,s),\psi(t,s)\right) \leqslant \mathscr{F}\left(\mathbf{E}(\varphi(g_1,g_2)),\psi(\mathbf{E}(g_1),\mathbf{E}(g_2))\right).$$

If $\varphi(a,b)+\varphi(A,B)-\varphi(A,b)-\varphi(a,B) \leqslant 0$, then

$$\min_{(t,s)\in D} \mathscr{F}\left(M_{34}(t,s),\psi(t,s)\right) \leqslant \min_{(t,s)\in D} \mathscr{F}\left(\mathbf{E}(\varphi(g_1,g_2)),\psi(\mathbf{E}(g_1),\mathbf{E}(g_2))\right).$$

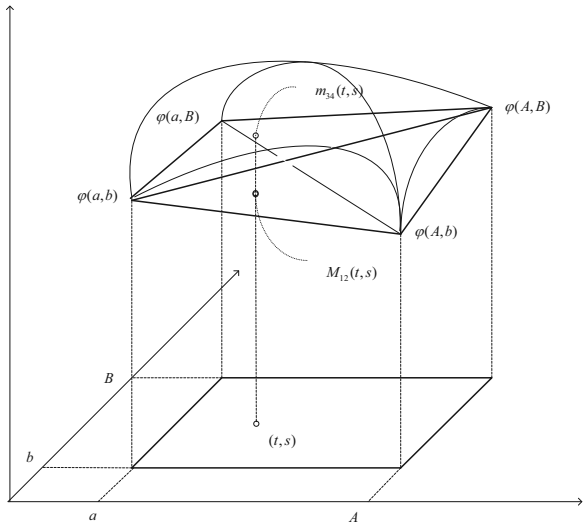

Figure 2: *Conversions in Theorem 5*

Proof. If $\varphi(a,b)+\varphi(A,B)-\varphi(A,b)-\varphi(a,B)\geqslant 0$, then by Theorem 5, inequality (2) holds. Since $(\mathbf{E}(g_1),\mathbf{E}(g_2))\in D$, then

$$\min_{(t,s)\in D}\mathscr{F}\left(M_{12}(t,s),\psi(t,s)\right)\leqslant\mathscr{F}\left((M_{12}(E(g_1),E(g_2)),\psi(\mathbf{E}(g_1),\mathbf{E}(g_2))\right).$$

By Theorem 5, we have that $M_{12}(E(g_1),E(g_2))\leqslant\mathbf{E}(\varphi(g_1,g_2))$. Since $\mathscr{F}$ is increasing in the first variable, we get

$$\min_{(t,s)\in D}\mathscr{F}\left(M_{12}(t,s),\psi(t,s)\right)\leqslant\mathscr{F}\left(\mathbf{E}(\varphi(g_1,g_2)),\psi(\mathbf{E}(g_1),\mathbf{E}(g_2))\right)$$

and obtain the desired inequality. □

A multiplicative conversion is made by taking $\mathscr{F}(x,y)=\dfrac{x}{y}$.

COROLLARY 1. *Suppose that assumptions of Theorem 6 hold with* $\varphi(D)>0$ *additionally.*

If $\varphi(a,b)+\varphi(A,B)-\varphi(A,b)-\varphi(a,B)\geqslant 0$, *then*

$$\min_{(t,s)\in D}\frac{M_{12}(t,s)}{\varphi(t,s)}\cdot\varphi(\mathbf{E}(g_1),\mathbf{E}(g_2))\leqslant\mathbf{E}(\varphi(g_1,g_2))\leqslant\varphi(\mathbf{E}(g_1),\mathbf{E}(g_2)).$$

In opposite, if $\varphi(a,b)+\varphi(A,B)-\varphi(A,b)-\varphi(a,B)\leqslant 0$, *then*

$$\min_{(t,s)\in D}\frac{M_{34}(t,s)}{\varphi(t,s)}\cdot\varphi(\mathbf{E}(g_1),\mathbf{E}(g_2))\leqslant\mathbf{E}(\varphi(g_1,g_2))\leqslant\varphi(\mathbf{E}(g_1),\mathbf{E}(g_2)).$$

A conversion by medium value is given by the next lemma.

LEMMA 1. *Assume that* φ, g_1, g_2 *and* $\mathbf{E}$ *are as in Theorem 6. Let* $\alpha, \beta \geqslant 0$ *such that* $\alpha + \beta = 1$.

If $\varphi(a,b) + \varphi(A,B) - \varphi(A,b) - \varphi(a,B) \geqslant 0$ *then*

$$(\alpha\lambda_1 + \beta\lambda_2)\mathbf{E}(g_1) + (\alpha\mu_1 + \beta\mu_2)\mathbf{E}(g_2) + \alpha\nu_1 + \beta\nu_2 \leqslant \mathbf{E}(\varphi(g_1, g_2)).$$

If $\varphi(a,b) + \varphi(A,B) - \varphi(A,b) - \varphi(a,B) \leqslant 0$, *then*

$$(\alpha\lambda_3 + \beta\lambda_4)\mathbf{E}(g_1) + (\alpha\mu_3 + \beta\mu_4)\mathbf{E}(g_2) + \alpha\nu_3 + \beta\nu_4 \leqslant \mathbf{E}(\varphi(g_1, g_2)).$$

Proof. Considering that

$$M_{12}(\mathbf{E}(g_1), \mathbf{E}(g_2) = \max\{\lambda_1\mathbf{E}(g_1) + \mu_1\mathbf{E}(g_1) + \nu_1, \lambda_2\mathbf{E}(g_1) + \mu_2\mathbf{E}(g_2) + \nu_2\},$$

we obtain the first inequality if $\varphi(a,b) + \varphi(A,B) - \varphi(A,b) - \varphi(a,B) \geqslant 0$. $\square$

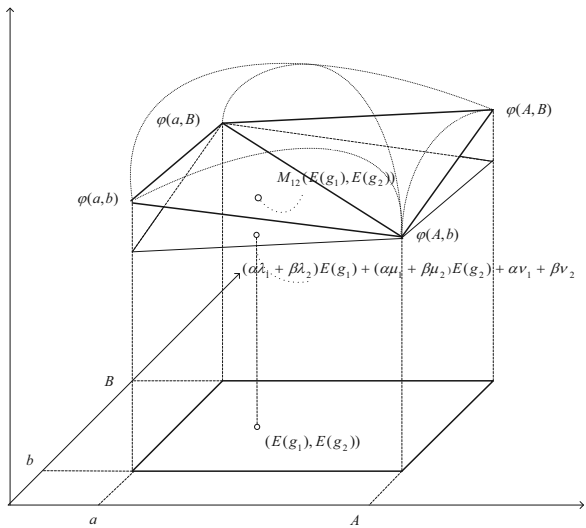

Figure 3: *Conversion by a medium value*

A conversion with very special condition is given bellow.

PROPOSITION 1. Suppose that assumptions of Lemma 1 hold.

(*i*) If $\varphi(a,b) + \varphi(A,B) - \varphi(A,b) - \varphi(a,B) \geqslant 0$ and $\nu_1 \cdot \nu_2 < 0$, then

$$U_{12}\mathbf{E}(g_1) + V_{12}\mathbf{E}(g_2) \leqslant \mathbf{E}(\varphi(g_1, g_2)) \leqslant \varphi(\mathbf{E}(g_1), \mathbf{E}(g_2)),$$

where:

$$U_{12} = \frac{\nu_2\lambda_1 - \nu_1\lambda_2}{\nu_2 - \nu_1},\ V_{12} = \frac{\nu_2\mu_1 - \nu_1\mu_2}{\nu_2 - \nu_1}.$$

(ii) If $\varphi(a,b)+\varphi(A,B)-\varphi(A,b)-\varphi(a,B)\leqslant 0$ and $\nu_3\cdot\nu_4<0$, then

$$U_{34}=\frac{\nu_4\lambda_3-\nu_3\lambda_4}{\nu_4-\nu_3},\ V_{34}=\frac{\nu_4\mu_3-\nu_3\mu_4}{\nu_4-\nu_3}.$$

Proof. Solving the system $\begin{cases}\alpha+\beta=1\\ \alpha\nu_1+\beta\nu_2=0\end{cases}$ by α,β we obtain that $\alpha\lambda_1+\beta\lambda_2=U_{1,2}$ and $\alpha\mu_1+\beta\mu_2=V_{1,2}$. $\square$

Considering the Corollary 1, the next Proposition is given.

PROPOSITION 2. Let $\varphi:D\to\mathbb{R}$ be a continuous concave positive function, $g_1,g_2\in\mathscr{L}$ and a linear mean $\mathbf{E}$ on $\mathscr{L}$.

(i) If $\varphi(a,b)+\varphi(A,B)-\varphi(A,b)-\varphi(a,B)\geqslant 0$ and $\nu_1\cdot\nu_2<0$, then:

$$\min_{(t,s)\in D}\frac{U_{12}t+V_{12}s}{\varphi(t,s)}\cdot\varphi(\mathbf{E}(g_1),\mathbf{E}(g_2))\leqslant\mathbf{E}(\varphi(g_1,g_2))\leqslant\varphi(\mathbf{E}(g_1),\mathbf{E}(g_2)).\tag{3}$$

(ii) If $\varphi(a,b)+\varphi(A,B)-\varphi(A,b)-\varphi(a,B)\leqslant 0$ and $\nu_3\cdot\nu_4<0$, then:

$$\min_{(t,s)\in D}\frac{U_{34}t+V_{34}s}{\varphi(t,s)}\cdot\varphi(\mathbf{E}(g_1),\mathbf{E}(g_2))\leqslant\mathbf{E}(\varphi(g_1,g_2))\leqslant\varphi(\mathbf{E}(g_1),\mathbf{E}(g_2)),$$

where values U_{12} V_{12}, U_{34} and V_{34} are given in Proposition 2.

Gheorghiu's type inequality is a converse of Hölder's type inequality. The original Gheorghiu inequality from [9] will be presented in the next section. Here the proof for a refinement is presented.

THEOREM 7. *Let $\mathbf{E}$ be a linear mean on $\mathscr{L}$ and for $g_1,g_2\in\mathscr{L}$ let us assume that $g_1(\Omega)\subset[a,A]$ and $g_2(\Omega)\subset[b,B]$ for positive real numbers a,b. Let p,q be positive real numbers such that $\frac{1}{p}+\frac{1}{q}=1$ holds. Then*

$$\frac{p^{\frac{1}{p}}q^{\frac{1}{q}}(abAB)^{\frac{1}{pq}}\left((AB)^{\frac{1}{p}}-(ab)^{\frac{1}{p}}\right)^{\frac{1}{p}}\left((AB)^{\frac{1}{q}}-(ab)^{\frac{1}{q}}\right)^{\frac{1}{q}}}{AB-ab}\cdot(\mathbf{E}(g_1))^{\frac{1}{p}}(\mathbf{E}(g_2))^{\frac{1}{q}}$$
$$\leqslant\mathbf{E}\left(g_1^{\frac{1}{p}}\cdot g_2^{\frac{1}{q}}\right)\leqslant(\mathbf{E}(g_1))^{\frac{1}{p}}(\mathbf{E}(g_2))^{\frac{1}{q}}.\tag{4}$$

Proof. The function $\varphi(x,y)=x^{\frac{1}{p}}y^{\frac{1}{q}}$ is continuous, concave and positive for all $(x,y)\in[a,A]\times[b,B]$. Because $\left(A^{\frac{1}{p}}-a^{\frac{1}{p}}\right)\left(B^{\frac{1}{q}}-b^{\frac{1}{q}}\right)>0$, for application of Proposition 2 it is enough to prove that

$$\nu_1=a^{\frac{1}{p}}b^{\frac{1}{q}}-ab^{\frac{1}{q}}\frac{A^{\frac{1}{p}}-a^{\frac{1}{p}}}{A-a}-a^{\frac{1}{p}}b\frac{B^{\frac{1}{q}}-b^{\frac{1}{q}}}{B-b}\geqslant 0$$

and

$$v_2 = A^{\frac{1}{p}}B^{\frac{1}{q}} - AB^{\frac{1}{q}}\frac{A^{\frac{1}{p}} - a^{\frac{1}{p}}}{A-a} - A^{\frac{1}{p}}B\frac{B^{\frac{1}{q}} - b^{\frac{1}{q}}}{B-b} \leqslant 0.$$

Since the function $f(x) = x^{\frac{1}{p}}$ is concave for $p > 1$, $f'(x)$ is continuous and decreasing. So there exists $c \in [a,A]$ such that $f'(c) = \dfrac{A^{\frac{1}{p}} - a^{\frac{1}{p}}}{A-a}$ and $f'(a) \geqslant f'(c) \geqslant f'(A)$ which gives

$$\frac{1}{p}a^{\frac{1}{p}-1} \geqslant \frac{A^{\frac{1}{p}} - a^{\frac{1}{p}}}{A-a} \geqslant \frac{1}{p}A^{\frac{1}{p}-1}$$

Multiplying with $ab^{\frac{1}{q}}$ and $AB^{\frac{1}{q}}$ we get

$$\frac{a^{\frac{1}{p}}b^{\frac{1}{q}}}{p} \geqslant ab^{\frac{1}{q}}\frac{A^{\frac{1}{p}} - a^{\frac{1}{p}}}{A-a} \quad \text{and} \quad AB^{\frac{1}{q}}\frac{A^{\frac{1}{p}} - a^{\frac{1}{p}}}{A-a} \geqslant \frac{A^{\frac{1}{p}}B^{\frac{1}{q}}}{p}.$$

Similar consideration on $f(x) = x^{\frac{1}{q}}$ gives

$$\frac{1}{q}b^{\frac{1}{q}-1} \geqslant \frac{B^{\frac{1}{q}} - b^{\frac{1}{q}}}{B-b} \geqslant \frac{1}{p}A^{\frac{1}{p}-1}.$$

Multiplying with $a^{\frac{1}{p}}b$ and $A^{\frac{1}{p}}B$ we get

$$\frac{a^{\frac{1}{p}}b^{\frac{1}{q}}}{q} \geqslant a^{\frac{1}{p}}b\frac{B^{\frac{1}{q}} - b^{\frac{1}{q}}}{B-b} \quad \text{and} \quad A^{\frac{1}{p}}B\frac{B^{\frac{1}{q}} - b^{\frac{1}{q}}}{B-b} \geqslant \frac{A^{\frac{1}{p}}B^{\frac{1}{q}}}{q}.$$

Now we have

$$v_1 = a^{\frac{1}{p}}b^{\frac{1}{q}} - ab^{\frac{1}{q}}\frac{A^{\frac{1}{p}} - a^{\frac{1}{p}}}{A-a} - a^{\frac{1}{p}}b\frac{B^{\frac{1}{q}} - b^{\frac{1}{q}}}{B-b}$$

$$v_1 \geqslant a^{\frac{1}{p}}b^{\frac{1}{q}} - \frac{a^{\frac{1}{p}}b^{\frac{1}{q}}}{p} - \frac{a^{\frac{1}{p}}b^{\frac{1}{q}}}{q} = a^{\frac{1}{p}}b^{\frac{1}{q}}\left(1 - \frac{1}{p} - \frac{1}{q}\right) = 0.$$

$$v_2 = A^{\frac{1}{p}}B^{\frac{1}{q}} - AB^{\frac{1}{q}}\frac{A^{\frac{1}{p}} - a^{\frac{1}{p}}}{A-a} - A^{\frac{1}{p}}B\frac{B^{\frac{1}{q}} - b^{\frac{1}{q}}}{B-b}$$

$$v_2 \leqslant A^{\frac{1}{p}}B^{\frac{1}{q}} - \frac{A^{\frac{1}{p}}B^{\frac{1}{q}}}{p} - \frac{A^{\frac{1}{p}}B^{\frac{1}{q}}}{q} = A^{\frac{1}{p}}B^{\frac{1}{q}}\left(1 - \frac{1}{p} - \frac{1}{q}\right) = 0.$$

Note that (4) is equal to (3) by coefficients

$$U_{12} = \frac{B^{\frac{1}{q}}b^{\frac{1}{q}}\left((AB)^{\frac{1}{p}} - (ab)^{\frac{1}{p}}\right)}{AB - ab} \quad \text{and} \quad V_{12} = \frac{A^{\frac{1}{p}}a^{\frac{1}{p}}\left((AB)^{\frac{1}{q}} - (ab)^{\frac{1}{q}}\right)}{AB - ab}.$$

It is necessary to minimize $\min\limits_{(t,s)\in D} \dfrac{U_{12}t+V_{12}s}{t^{\frac{1}{p}}s^{\frac{1}{q}}} = \min\limits_{(t,s)\in D}\left(U_{12}\cdot\left(\dfrac{t}{s}\right)^{\frac{1}{q}}+V_{12}\cdot\left(\dfrac{s}{t}\right)^{\frac{1}{p}}\right)$. Supstitution $z=\dfrac{t}{s}$ and easy calculus gives $\min\limits_{(t,s)\in D}\dfrac{U_{12}t+V_{12}s}{\varphi(t,s)} = U_{12}^{\frac{1}{p}}V_{12}^{\frac{1}{q}}p^{\frac{1}{p}}q^{\frac{1}{q}}$. Substituting the all above in (3) we get (4) and the proof is done. $\square$

REMARK 1. Using substitutions $g_1 \rightarrowtail g_1^p$ and $g_1 \rightarrowtail g_1^p$ in the previous Theoram we get the following

$$\frac{p^{\frac{1}{p}}q^{\frac{1}{q}}(AbB^q-ab^qB)^{\frac{1}{p}}(A^paB-a^pbA)^{\frac{1}{q}}}{A^pB^q-a^pb^q}\cdot(\mathbf{E}(g_1^p))^{\frac{1}{p}}(\mathbf{E}(g_2^q))^{\frac{1}{q}}$$
$$\leqslant \mathbf{E}(g_1\cdot g_2)\leqslant(\mathbf{E}(g_1^p))^{\frac{1}{p}}(\mathbf{E}(g_2^q))^{\frac{1}{q}}. \tag{5}$$

Normalized Gheorghiu inequality in the case that $(\Omega,p,\mathscr{F})$ is a probability space is given in [5]. Functions $g_1=X$ and $g_2=Y$ are random variables and $\mathbf{E}(g_1)=E[X]$ is the mathematical expectation of random variable X.

COROLLARY 2. *Suppose that random variables X and Y capture their values $0<\alpha\leqslant X\leqslant 1$ and $0<\beta\leqslant Y\leqslant 1$. Equality $\dfrac{1}{p}+\dfrac{1}{q}=1$ implies*

$$\frac{p^{\frac{1}{p}}q^{\frac{1}{q}}(\beta-\alpha\beta^q)^{\frac{1}{p}}(\alpha-\alpha^p\beta)^{\frac{1}{q}}}{1-\alpha^p\beta^q}(E[X^p])^{\frac{1}{p}}(E[Y^q])^{\frac{1}{q}}\leqslant E[XY]\leqslant(E[X^p])^{\frac{1}{p}}(E[Y^q])^{\frac{1}{q}}$$

in the case of positive p and q.

3. Original Gheorghiu's inequality

In the article [9], the converse of Hölder's inequality was obtained. Here it is presented in the next theorem.

THEOREM 8. *Suppose that $a_1,a_2,\dots a_n,b_1,b_2,\dots b_n$ are given $2n$ positive real numbers. Let pair (a,A) represents the minimal and maximal number among $a_1,a_2,\dots,a_n$ and in the same manner let (b,B) be the pair of those among the $b_1,b_2,\dots,b_n$. Assume that p is a real number greater than 1. Then we have*

$$1\leqslant\frac{\left(\sum_{k=1}^n a_k^p\right)\left(\sum_{k=1}^n b_k^{\frac{p}{p-1}}\right)^{p-1}}{\left(\sum_{k=1}^n a_kb_k\right)^p}\leqslant\mu, \tag{6}$$

where

$$\mu=\frac{(p-1)^{p-1}}{p^p}\cdot\frac{A^{p-1}}{a^{p-1}}\cdot\frac{B}{b}\cdot\frac{\left(1-\frac{a^pb^{\frac{p}{p-1}}}{A^pB^{\frac{p}{p-1}}}\right)^p}{\left(1-\frac{ab^{\frac{1}{p-1}}}{AB^{\frac{1}{p-1}}}\right)\left(1-\frac{a^{p-1}b}{A^{p-1}B}\right)^{p-1}}. \tag{7}$$

The left inequality has been demonstrated by Hölder and Jensen. Theorem 8 could be modulated in the terms that are given in the introduction of this paper.

THEOREM 7'. *Suppose that* $\Omega = \{1,2,3,\dots,n\}$ *and* $g_1, g_2 : \Omega \to \mathbb{R}$ *are given real functions. Let* $a = \min\{g_1(k), k \in \Omega\}$, $A = \max\{g_2(k), k \in \Omega\}$, $b = \min\{g_2(k), k \in \Omega\}$ *and* $B = \max\{g_2(k), k \in \Omega\}$. *Let* $\mathbf{E}(g) = \frac{1}{n}\sum_{k=1}^{n} g(k)$. *If* $p,q > 1$, $\frac{1}{p} + \frac{1}{q} = 1$, *then*

$$1 \leqslant \frac{\mathbf{E}(g_1^p)^{\frac{1}{p}} \cdot \mathbf{E}(g_2^q)^{\frac{1}{q}}}{\mathbf{E}(g_1 \cdot g_2)} \leqslant \mu^{\frac{1}{p}}, \tag{8}$$

where μ *is given by (7).*

Inequality (8) can be expressed as the chain of inequalities alike the (5):

$$\mu^{-\frac{1}{p}} \cdot \mathbf{E}(g_1^p)^{\frac{1}{p}} \cdot \mathbf{E}(g_2^q)^{\frac{1}{q}} \leqslant \mathbf{E}(g_1 \cdot g_2) \leqslant \mathbf{E}(g_1^p)^{\frac{1}{p}} \cdot \mathbf{E}(g_2^q)^{\frac{1}{q}} \tag{9}$$

The next proposition shows that left inequality in (5) is better than the left inequality in (9).

PROPOSITION 3. Under the assumptions of Theorem 7', the next is valid:

$$\frac{p^{\frac{1}{p}} q^{\frac{1}{q}} \left(AbB^q - ab^qB\right)^{\frac{1}{p}} \left(A^paB - a^pbA\right)^{\frac{1}{q}}}{A^pB^q - a^pb^q} = p \cdot \mu^{-\frac{1}{p}}. \tag{10}$$

Proof. Using elementary algebra we get

$$\mu^{-\frac{1}{p}} = \frac{q^{\frac{1}{q}} a^{\frac{1}{q}} b^{\frac{1}{p}} \left(AB^{\frac{q}{p}} - ab^{\frac{q}{p}}\right)^{\frac{1}{p}} \left(A^{\frac{p}{q}}B - a^{\frac{p}{q}}b\right)^{\frac{1}{q}}}{p^{\frac{1}{q}} A^{\frac{p}{q^2}+1-p} B^{\frac{q}{p^2}+1-q} \left(A^pB^q - a^pb^q\right)}.$$

Separately, using relation $p - 1 = \frac{p}{q}$, we have $\frac{p}{q^2} + 1 - p = -\frac{1}{q}$ and $\frac{q}{p^2} + 1 - q = -\frac{1}{p}$. The proof is prolonging with

$$\mu^{-\frac{1}{p}} = \frac{q^{\frac{1}{q}} A^{\frac{1}{q}} a^{\frac{1}{q}} B^{\frac{1}{p}} b^{\frac{1}{p}} \left(AB^{\frac{q}{p}} - ab^{\frac{q}{p}}\right)^{\frac{1}{p}} \left(A^{\frac{p}{q}}B - a^{\frac{p}{q}}b\right)^{\frac{1}{q}}}{p^{\frac{1}{q}} \left(A^pB^q - a^pb^q\right)}.$$

By selective multiplying factors and brackets with the same exponent we have

$$\mu^{-\frac{1}{p}} = \frac{q^{\frac{1}{q}} \left(AbB^{\frac{q}{p}+1} - ab^{\frac{q}{p}+1}B\right)^{\frac{1}{p}} \left(aA^{\frac{p}{q}+1}B - a^{\frac{p}{q}+1}bA\right)^{\frac{1}{q}}}{p^{\frac{1}{q}} \left(A^pB^q - a^pb^q\right)}.$$

Considering that $\frac{q}{p} + 1 = q$ and $\frac{p}{q} + 1 = q$ we finally obtain that

$$\mu^{-\frac{1}{p}} = \frac{p^{\frac{1}{p}} q^{\frac{1}{q}} \left(AbB^q - ab^qB\right)^{\frac{1}{p}} \left(aA^pB - a^pbA\right)^{\frac{1}{q}}}{p\left(A^pB^q - a^pb^q\right)}.$$

The last equation is the same as (10) and the proof is finished. □

REFERENCES

[1] V. CSISZÁR AND T. F. MÓRI, *The convexity method of proving moment-type inequalities*, Statistics and Probability Letters **66**, 1 (2004), 303–313.

[2] V. ČULJAK, B. IVANKOVIĆ AND J. E. PEČARIĆ, *On Jensen-McShane's inequality*, Periodica Mathematica Hungarica **58**, 2 (2009), 139–154.

[3] B. IVANKOVIĆ, S. IZUMINO, J. E. PEČARIĆ AND M. TOMINAGA, *On Jensen-McShane's inequality*, Journal of Inequalities in Pure and Applied Mathematics **8**, 3 (2007), 88–97.

[4] B. IVANKOVIĆ, *Konverzije i poboljšanja Jensenove nejednakosti za funkcije više varijabli*, Doctoral thesis Zagreb, 2010 (croatian).

[5] S. IZUMINO AND M. TOMINAGA, *Estimations in Hölder's type inequalities*, Mathematical Inequalities and Applications **4**, 1 (2001), 163–187.

[6] J. MATKOWSKI, *A Converse of the Hölder Inequality Theorem Mathematical Inequalities and Applications*, **12**, 1 (2009), 21–32.

[7] D. MITRINOVIĆ, J. E. PEČARIĆ AND A. M. FINK, *Classical and New Inequalities in Analysis*, Kluwer. Acad. Pub., Boston Dordrecht, 1993.

[8] J. E. PEČARIĆ, F. PROSCHAN, AND Y. L. TONG, *Convex Functions, Partial Orderings, and Statistical Applications*, Academic Press, Inc. San Diego, 1992.

[9] M. SERBAN AND A. GHEORGHIU, *Note sur une Inégalité de Cauchy*, Bull. Math. Soc. Rommaine des Sciences **35**, 1 (1933), 117–119.

(Received January 28, 2016)

Božidar Ivanković
Faculty of Transport and Traffic Sciences
University of Zagreb
Zagreb, Croatia
e-mail: ivankovb@fpz.hr

Mathematical
Inequalities
& Applications
Volume 19, Number 4 (2016), 1203–1226 doi:10.7153/mia-19-89

JENSEN, HÖLDER, MINKOWSKI, JENSEN–STEFFENSEN AND SLATER–PEČARIĆ INEQUALITIES DERIVED THROUGH N–QUASICONVEXITY

SHOSHANA ABRAMOVICH

In honour of Professors
Neven Elezović, Marko Matić and Ivan Perić
on the occasion of their 60th birthdays

(*Communicated by C. P. Niculescu*)

Abstract. Jensen, Hölder, Minkowski, Jensen-Steffensen and Slater-Pečarić type inequalities derived by the properties of γ-quasiconvex functions that we deal with here, can be seen as analog to these for superquadratic functions and refinements of these for convex functions.

1. Introduction

We deal here with inequalities satisfied by one of the many variants of convex functions. These functions are called γ-quasiconvex functions and have already been dealt with by S. Abramovich, L.-E. Persson and N. Samko. The basic facts on γ-quasiconvexity and superquadracity on which this paper is built, can be found in [4], [6], and [7].

The importance of convex functions is obvious and widely acknowledged. Numerous publications deal with convex functions, their properties and applications. In particular we refer to the classical 1964 book "Inequalities" by Hardy, Littlewood and Polya [9], the 1992 book "Convex functions, partial ordering and statistical applications" by Pecaric, Proschan and Tong [15] and to the 2006 book "Convex functions and their applications – a contemporary approach" by Niculescu and Persson [13]. Out of dealing with the classical convex functions evolved many generalizations and refinements of this notion, see in particular Capter 2 in [13].

Among the many types of refinements and generalizations of convex functions are the usual quasiconvexity, Morrey-convexity, Reitz-convexity, h-convexity, superquadracity and many others.

The subject of variants of convex functions and the comparison between them deserves at least every decade a large updated suvey which is out of the scope of this

Mathematics subject classification (2010): 26D15.
Keywords and phrases: Jensen's inequality, Hölder's inequality, Minkowski inequality, convex function, γ-quasiconvex functions, N-quasiconvex functions, superquadratic functions.

Paper MIA-19-89

paper. We compare here results obtained through the use of γ-quasiconvexity and superquadracity as these notions are the subjects of this paper, see Remark 1 and Theorem 4.

The notion of γ-quasiconvexity with which we deal here is related but is not a special case of any of the cases mentioned above. Therefore it is reasonable to assume that our new and natural notion of γ-quasiconvexity will bring about new results and applications.

Currently the following is already known: The original Hardy's inequality has a "turning point" (the point where the inequality is reversed) at $p=1$. This inequality can be proved directly by the properties of convex functions. (The proof can be found in [16] and its references.) But by using the γ-quasiconvexity we get a refined variant of the original Hardy's inequality where the turning point is any $p>1$ (see [6] and [7]).

It is known that most of the classical inequalities can be obtained by the properties of convex functions, therefore it is reasonable to assume that using the properties of γ-quasiconvexity will bring about proofs of generalizationd and refinements of more classical inequalities.

We know that if $f:=\mathbb{R}^+\to\mathbb{R}^+$ is a concave function then $\frac{f(x)}{x}$ is not increasing (see for instance [11, page 142] and [17]). This is one of the reasons it is natural to deal with quasi-monotone functions, that is with γ-quasidecreasing functions. About the importance of this notion especially to theories related to approximation and interpolations see [11].

The notion of a γ-quasiconvex function is analog to a quasimonotone function (that is to γ-quasiincreasing functions). Therefore we hope to get in future publications analog results to those we know about quasimonotone functions, in addition to those mentioned above related to Hardy's inequalities and to those dealt with in this paper which are related in particular to Jensen, Hölder and Slater Pečarić inequalities.

γ-quasiconvex functions and superquadratic functions are closely related and therefore it is interesting to show side by side results related to these two sets.

We start with a definition of and lemmas about γ-quasiconvexity.

DEFINITION 1. Let γ be a real number. A real-valued function f defined on an interval $[0,b)$ with $0<b\leqslant\infty$ is called γ-quasiconvex if it can be represented as the product of a comvex function and the power function x^{γ}.

A convex function φ on $[0,b)$, $0<b\leqslant\infty$ is characterized by the inequality

$$\varphi(y)-\varphi(x)\geqslant C_{\varphi}(x)(y-x),\quad \forall x,y\in(0,b],\qquad C_{\varphi}\in\mathbb{R}, \tag{1.1}$$

from which we establish easily the following lemmas:

LEMMA 1. [6, Lemma1] *Let $\psi_{\gamma}(x)=x^{\gamma}\varphi(x)$, $\gamma\in\mathbb{R}$, where φ is convex on $[0,b)$, that is, ψ_{γ} is a γ-quasiconvex function. Then*

$$\psi_{\gamma}(y)-\psi_{\gamma}(x)\geqslant\varphi(x)(y^{\gamma}-x^{\gamma})+C_{\varphi}(x)y^{\gamma}(y-x), \tag{1.2}$$

holds for all $x\in[0,b)$, $y\in[0,b)$, where $C_{\varphi}(x)$ is defined by (1.1).

The following is derived by some computation on the right handside of (1.2), see also [7, Lemma 2]:

LEMMA 2. [7] *Let φ be convex differentiable function and let $\psi_k(x) = x^k \varphi(x)$, $k = 0,1,...,N$, then the function $\psi_N(x) = x^N \varphi(x)$, satisfies for $x,y \in [a,b)$, $a \geqslant 0$*

$$\begin{aligned} &\psi_N(y) - \psi_N(x) \\ &\geqslant (\psi_N(x))'(y-x) + (y-x)^2 \sum_{k=1}^{N} y^{k-1} (\psi_{N-k}(x))' \\ &= (\psi_N(x))'(y-x) + (y-x)^2 \frac{\partial}{\partial x}\left(\frac{x^N - y^N}{x-y}\varphi(x)\right). \end{aligned} \tag{1.3}$$

Now we quote a definition and some basic properties of superquadratic functions.

DEFINITION 2. [4, Definition 2.1] A function $\varphi : [0,\infty) \to \mathbb{R}$ is superquadratic provided that for all $x \geqslant 0$ there exists a constant $C(x) \in \mathbb{R}$ such that

$$\varphi(y) - \varphi(x) - \varphi(|y-x|) \geqslant C(x)(y-x) \tag{1.4}$$

for all $y \geqslant 0$.

From this definition we get that when φ is a superquadratic function, if $\varphi \geqslant 0$, then φ is convex and $\varphi(0) = \varphi'(0) = 0$, see [4].

When $\varphi : [0,b) \to \mathbb{R}$ is differentiable non-negative, incresing convex and $\varphi(0) = 0$ the function $\psi_N(x) = x^N \varphi(x)$ is not only N-quasiconvex where N is a non-negative integer but also superquadratic. In particular the power functions $f(x) = x^p$, $p \geqslant 2$, $x \geqslant 0$ are superquadratic functions as well as 1-quasiconvex functions. The power functions $f(x) = x^p$, $p \geqslant N+1$, $N \geqslant 1$, $x \geqslant 0$, are also N-quasiconvex functions.

In Section 2 we deal with Jensen's type and Slater-Pečarić type inequalities when the coefficients $\alpha_i \geqslant 0$, $i = 1,...,n$. In Section 5 we deal with inequalities for which the coefficients are not always non-negative. We call these coefficients *Steffensen's coefficients*. For such coefficients and for a function φ we get:

LEMMA 3. *Let $\varphi : [0,\infty) \to \mathbb{R}$ be a given function, let $\boldsymbol{x}$ be a nonnegative monotonic n-tuple in $\mathbb{R}^n$, and $\boldsymbol{\rho}$ a real n-tuple satisfying Steffensen's coefficients, that is*

$$\begin{aligned} &0 \leqslant P_j \leqslant P_n, \qquad j = 1,...,n, \quad P_n > 0, \\ &P_j = \sum_{i=1}^{j} \rho_i, \quad \overline{P}_j = \sum_{i=j}^{n} \rho_i, \qquad j = 1,...,n \end{aligned} \tag{1.5}$$

Then

$$\begin{aligned} \sum_{i=1}^{n} \rho_i \varphi(x_i) = &\sum_{j=1}^{k-1} P_j \left(\varphi(x_j) - \varphi(x_{j+1})\right) + P_k \varphi(x_k) \\ &+ \overline{P}_{k+1} \varphi(x_{k+1}) + \sum_{j=k+2}^{n} \overline{P}_j \left(\varphi(x_j) - \varphi(x_{j-1})\right). \end{aligned} \tag{1.6}$$

Identity (1.6) is used in the proofs in Section 5 related to N-quasiconvex functions in a similar way as they are used in [15] and [1] for convex functions, in [2] for superquadratic functions and in [7] for 1-quasiconvex functions.

By using the results stated in Section 2 we get in Section 3 Hölder's type inequalities which are of the type

$$\int fg d\nu \lessgtr \left(\int g^q d\nu\right)^{1/q} \left(\int f^p d\nu\right)^{1/p} H(f,g)$$

that lately are widely discussed (see for instance [10], [12], [14], [19] and their references).

In Section 4 we prove Minkowski type inequalities by using again the results stated in Section 2.

In Section 5 we get more inequalities which are derived from the results from Section 2.

In Section 6 we get inequalities related to differences of "Jensen's gap" motivated by the work of Dragomir in [8]. The results in this section are analog to the results in [3].

2. Jensen and Slater-Pečarić type inequalities for N-quasiconvex functions

We quote first extensions of Jensen and of Slater-Pečarić inequalities for superquadratic functions which are proved in [4] and stated in Lemma A and in Theorem B.

LEMMA A. [4, Lemma 2.3] *Supppose that ψ is superquadratic on $[0,b)$ then*

$$\int_\Omega \psi(f(s))\,d\mu(s) - \psi\left(\int_\Omega f(s)\,d\mu(s)\right) \geqslant \int_\Omega \psi\left(\left|f(s) - \int_\Omega f(\sigma)\,d\mu(\sigma)\right|\right) d\mu(s), \tag{2.1}$$

where f is any non-negative μ-integrable function on a probability measure space (Ω,μ) and $\int_\Omega f(s)\,d\mu(s) > 0$.

The discrete version of (2.1) is:

Suppose that ψ is superquadratic on $[0,b)$. Let $0 \leqslant x_i < b$, $i = 1,\dots,n$ and let $\overline{x} = \sum_{i=1}^n \alpha_i x_i$ where $\alpha_i \geqslant 0$ and $\sum_{i=1}^n \alpha_i = 1$. Then

$$\sum_{i=1}^n \alpha_i \psi(x_i) - \psi(\overline{x}) \geqslant \sum_{i=1}^n \alpha_i \psi(|x_i - \overline{x}|)\ . \tag{2.2}$$

LEMMA B. [4, Theorem 2.4] *Suppose that ψ is superquadratic and that $C(f(s))$ is given as in Definition 2. If μ is a probability measure, f is any non-negative μ-measurable function, $\int C(f(s))\,d\mu(s) \neq 0$, and m and M as defined by*

$$m = \int f(s)\,d\mu(s) \quad \text{and} \quad M = \frac{\int f(s)C(f(s))\,d\mu(s)}{\int C(f(s))\,d\mu(s)}.$$

then

$$\begin{aligned}
&\psi(m)+\int \psi(|f(s)-m|)\,d\mu(s)\\
&\leqslant \int \psi(f(s))\,d\mu(s)\\
&\leqslant \psi(M)-\int \psi(|f(s)-M|)\,d\mu(s).
\end{aligned}$$

The discrete version is: Suppose that ψ is superquadratic and C is as in Definition 2. Let $x_i \geqslant 0,\ i=1,\dots,n$ and let $\alpha_i \geqslant 0,\ \sum_{i=1}^n \alpha_i = 1$. If $\sum_{i=1}^n \alpha_i C(x_i) \neq 0$ we define $M = \frac{\sum_{i=1}^n \alpha_i x_i C(x_i)}{\sum_{i=1}^n \alpha_i C(x_i)}$. Then

$$\sum_{i=1}^n \alpha_i \psi(x_i) \leqslant \psi(M) - \sum_{i=1}^n \alpha_i \psi(|x_i - M|)\ ,$$

The following Theorem 1 may be considered an analog of lemmas A and B. In it we get refinements of Jensen's inequality and Slater-Pečarić inequality (see [1] and [15]). The refinements are obtained just by using (1.3) in Lemma 2 for each i and then summing up for $i=1,\dots,n$.

THEOREM 1. *Let $\varphi:[a,b)\to\mathbb{R},\ a\geqslant 0$ be convex differentiable function, and let $\psi_k(x)$ be $\psi_k(x)=x^k\varphi(x),\ k=0,1,\dots,N$, where $\psi_0=\varphi$. Let $\alpha_i\geqslant 0,\ x_i\in[a,b)$, $i=1,\dots,n,\ \sum_{i=1}^n \alpha_i = 1$. Then:*

1) A Jensen's type inequality holds where $\overline{x}=\sum_{i=1}^n \alpha_i x_i$:

$$\begin{aligned}
&\sum_{i=1}^n \alpha_i \psi_N(x_i) - \psi_N(\overline{x}) \qquad (2.3)\\
&\geqslant \sum_{i=1}^n \alpha_i \varphi(\overline{x})\left(x_i^N - \overline{x}^N\right) + \sum_{i=1}^n \alpha_i \varphi'(\overline{x}) x_i^N (x_i - \overline{x})\\
&= \sum_{i=1}^n \sum_{k=1}^N \alpha_i (x_i-\overline{x})^2 x_i^{k-1} (\psi_{N-k}(\overline{x}))'\\
&= \sum_{i=1}^n \alpha_i (x_i-\overline{x})^2 \frac{\partial}{\partial \overline{x}}\left(\frac{\overline{x}^N - x_i^N}{\overline{x}-x_i}\varphi(\overline{x})\right).
\end{aligned}$$

If φ is also non-negative and increasing then for $N=2,\dots,$ the above inequality refines Jensen's inequality. For $N=1$ we get for $\psi_1(x)=x\varphi(x)$

$$\sum_{i=1}^n \alpha_i \psi_1(x_i) - \psi_1(\overline{x}) \geqslant \sum_{i=1}^n \alpha_i \varphi'(\overline{x}) x_i (x_i - \overline{x}) = \sum_{i=1}^n \alpha_i \varphi'(\overline{x})(x_i-\overline{x})^2. \qquad (2.4)$$

If φ is increasing and convex (and not necessarily non-negative) then again (2.4) is a refinement of Jensen's inequality.

2) For a fixed $C \in [a,b)$ we get when $\alpha_i \geqslant 0,\ i=1,\ldots,n,\ \sum_{i=1}^{n}\alpha_i = 1$ that

$$\begin{aligned}
&C^N\varphi(C) - \sum_{i=1}^{n}\alpha_i x_i^N \varphi(x_i)\\
&= \psi_N(C) - \sum_{i=1}^{n}\alpha_i \psi_N(x_i)\\
&\geqslant \sum_{i=1}^{n}\alpha_i\left(x_i^N\varphi(x_i)\right)'(C-x_i) + \sum_{i=1}^{n}\alpha_i(C-x_i)^2\sum_{k=1}^{N}C^{k-1}\left(\psi_{N-k}(x_i)\right)'\\
&= \sum_{i=1}^{n}\alpha_i\left(x_i^N\varphi(x_i)\right)'(C-x_i) + \sum_{i=1}^{n}\alpha_i(C-x_i)^2\frac{\partial}{\partial x_i}\left(\frac{x_i^N - C^N}{x_i - C}\varphi(x_i)\right).
\end{aligned}$$

3) Especially if $\sum_{i=1}^{n}\alpha_i\psi_N'(x_i) > 0$, and if $C = M_{\psi_N} = \frac{\sum_{i=1}^{n}\alpha_i x_i \psi_N'(x_i)}{\sum_{i=1}^{n}\alpha_i\psi_N'(x_i)} \in [a,b)$, then by using $\sum_{i=1}^{n}\alpha_i\psi_N'(x_i)\left(M_{\psi_N} - x_i\right) = 0$ we get a Slater-Pečarić type inequality

$$\begin{aligned}
&\psi_N\left(M_{\psi_N}\right) - \sum_{i=1}^{n}\alpha_i\psi_N(x_i)\\
&\geqslant \sum_{i=1}^{n}\sum_{k=1}^{N}\alpha_i\left(M_{\psi_N} - x_i\right)^2 M_{\psi_N}^{k-1}\left(\psi_{N-k}(x_i)\right)'\\
&= \sum_{i=1}^{n}\alpha_i\left(M_{\psi_N} - x_i\right)^2\frac{\partial}{\partial x_i}\left(\frac{M_{\psi_N}^N - x_i^N}{M_{\psi_N} - x_i}\varphi(x_i)\right).
\end{aligned}$$

If φ is also non-negative and increasing then for $N = 1,\ldots$ the above inequality is a refinement of Slater Pečarić inequality.

Theorem 1 Case 1 appears in [5, Corollary 1].

We get in [7, Theorem 1] the integral form of Jensen's type inequality for γ-quasiconvex functions and the special case when $\gamma = 1$ is:

LEMMA C. [7] *Let f be a non-negative function. Let f and $\varphi\circ f$ be μ-integrable functions on the probability measure space (Ω,μ) and $\int_\Omega f(s)\,d\mu(s) > 0$. Let also $\psi(x) = x\varphi(x)$. If φ is a differentiable convex on $[0,b)$, $0 < b \leqslant \infty$*

$$\begin{aligned}
&\int_\Omega \psi(f(s))\,d\mu(s) - \psi\left(\int_\Omega f(s)\,d\mu(s)\right)\\
&\geqslant \int_\Omega \varphi'\left(\int_\Omega f(\sigma)\,d\mu(\sigma)\right)\left(f(s) - \int_\Omega f(\sigma)\,d\mu(\sigma)\right)^2 d\mu(s).
\end{aligned}$$

hold. If φ is also increasing we get a refinement of Jensen's inequality.

EXAMPLE 1. Let $\varphi(x) = e^{x^3}$, $\psi(x) = xe^{x^3}$ then from the convexity of ψ we get that $\int_0^1 \psi(x)\,dx \geqslant \frac{e^{\frac{1}{8}}}{2}$ and from the 1-quasiconvexity we get the better result $\int_0^1 \psi(x)\,dx \geqslant \frac{5e^{\frac{1}{8}}}{8}$.

REMARK 1. In [7, Proposition 5] it is proved that: Let f be a non-negative function. Let f and $\varphi \circ f$ be μ-integrable functions on the probability measure space (Ω, μ) and $\int_\Omega f(s)\, d\mu(s) > 0$. Let also $\psi(x) = x\varphi(x)$. If φ is a differentiable non-negative convex increasing on $[0,b)$, $0 < b \leqslant \infty$ and $\varphi(0) = \lim_{z\to 0^+} z\varphi'(z) = 0$ then ψ is also superquadratic and the inequalities

$$\begin{aligned}
&\int_\Omega \psi(f(s))\, d\mu(s) - \psi\left(\int_\Omega f(s)\, d\mu(s)\right) \\
&\geqslant \int_\Omega \varphi'\left(\int_\Omega f(\sigma)\, d\mu(\sigma)\right)\left(f(s) - \int_\Omega f(\sigma)\, d\mu(\sigma)\right)^2 d\mu(s) \\
&\geqslant \int_\Omega \psi\left(\left|f(s) - \int_\Omega f(\sigma)\, d\mu(\sigma)\right|\right) d\mu(s),
\end{aligned}$$

hold when $0 < f(s) \leqslant 2\int_\Omega f(\sigma)\, d\mu(\sigma)$ for every $s \in \Omega$, in particular when $0 < a \leqslant f(s) \leqslant 2a$, $s \in \Omega$.

The discrete form says there that: when $0 < x_i \leqslant 2\overline{x}$, $i = 1, \ldots, n$ and $\psi(x) = x\varphi(x)$ where $\varphi(x)$ is non-negative increasing differentiable and convex then Inequality (2.4) is better than (2.2) when $\varphi(0) = \lim_{z\to 0^+} z\varphi'(z) = 0$.

3. Hölder type inequalities derived from γ-quasiconvexity and superquadracity

In this section we use Jensen's type inequalities to prove new Hölder type inequalities and reversed Hölder type inequalities. We use in particular Lemma A, Lemma C and the following lemmas D and E to get refinements for $p \geqslant 2$ of Hölder inequality, lower bounds for $1 < p \leqslant 2$ and upper bounds when $0 < p < 1$.

LEMMA D. [7, Corollary 1] *Let $0 < p \leqslant 1$, and let f be a μ-measurable and positive function on the probability measure space (μ, Ω) and $x = \int_\Omega f(s)\, d\mu(s) > 0$. Then*

$$-I_1 + \left(\int_\Omega f(s)\, d\mu(s)\right)^p \leqslant \int_\Omega (f(s))^p\, d\mu(s) \leqslant \left(\int_\Omega f(s)\, d\mu(s)\right)^p,$$

where

$$I_1 = p\left(\int_\Omega f(s)\, d\mu(s)\right)^p \left(1 - \int_\Omega f(s)\, d\mu(s) \int_\Omega (f(s))^{-1}\, d\mu(s)\right) > 0.$$

LEMMA E. [7, Corollary 2] *Let $0 < p \leqslant 1$, let f be a non-negative μ-measurable function on the probability measure space (Ω, μ) and $x = \int_\Omega f(s)\, d\mu(s) > 0$. Then*

$$-I_2 + \left(\int_\Omega f(s)\, d\mu(s)\right)^p \leqslant \int_\Omega (f(s))^p\, d\mu(s) \leqslant \left(\int_\Omega f(s)\, d\mu(s)\right)^p, \tag{3.1}$$

where

$$I_2 = p\left(\int_\Omega f(s)\, d\mu(s)\right)^{p-1} \int_\Omega \frac{(f(s) - x)^2}{f(s)} d\mu(s). \tag{3.2}$$

As the power functions $\varphi(x) = x^p,\ x \geqslant 0$ are superquadratic when $p \geqslant 2$ and subquadratic when $1 \leqslant p \leqslant 2$, we get from Lemma A that for $p \geqslant 2$

$$\int_\Omega (f(s))^p \, d\mu(s) - \left(\int_\Omega f(s)\, d\mu(s)\right)^p \geqslant \int_\Omega \left(\left|f(s) - \int_\Omega f(\sigma)\, d\mu(\sigma)\right|\right)^p d\mu(s), \tag{3.3}$$

holds, where f is any non-negative μ-integrable function on a probability measure space (Ω, μ) and $\int_\Omega f(s)\, d\mu(s) > 0$.

In [18, Theorem 1.4] a refinement of Hölder's inequality is proved:

THEOREM 2. *For $p \geqslant 2$ and for any two non-negative ν-measurable functions f and g and for $\frac{1}{p} + \frac{1}{q} = 1$ we get a refinement of Hölder inequality*

$$\begin{aligned}\int_\Omega fg d\nu &\leqslant \left(\int_\Omega f^p d\nu - \int_\Omega \left|f - g^{q-1}\frac{\int_\Omega fg d\nu}{\int_\Omega g^q d\nu}\right|^p d\nu\right)^{\frac{1}{p}} \left(\int_\Omega g^q d\nu\right)^{\frac{1}{q}} \\ &= \left(\int_\Omega f^p d\nu - \int_\Omega \left|fg^{1-q} - \frac{\int_\Omega fg d\nu}{\int_\Omega g^q d\nu}\right|^p g^q d\nu\right)^{\frac{1}{p}} \left(\int_\Omega g^q d\nu\right)^{\frac{1}{q}}.\end{aligned}$$

In the case $1 < p \leqslant 2$ we get for any two non-negative ν-measurable functions f and g when $\int_\Omega f^p d\nu \geqslant \int_\Omega \left|f - g^{q-1}\frac{\int_\Omega fg d\nu}{\int_\Omega g^q d\nu}\right|^p d\nu$, that

$$\begin{aligned}&\left(\int_\Omega f^p d\nu\right)^{\frac{1}{p}} \left(\int_\Omega g^q d\nu\right)^{\frac{1}{q}} \\ &\geqslant \int_\Omega fg d\nu \geqslant \left(\int_\Omega f^p d\nu - \int_\Omega \left|f - g^{q-1}\frac{\int_\Omega fg d\nu}{\int_\Omega g^q d\nu}\right|^p d\nu\right)^{\frac{1}{p}} \left(\int_\Omega g^q d\nu\right)^{\frac{1}{q}}.\end{aligned}$$

From Lemma C we get that for the 1-quasiconvex functions $\varphi(x) = x^p,\ x \geqslant 0$, $p \geqslant 2$ the inequality

$$\begin{aligned}&\int_\Omega (f(s))^p \, d\mu(s) - \left(\int_\Omega f(s)\, d\mu(s)\right)^p \\ &\geqslant (p-1)\left(\int_\Omega f(s)\, d\mu(s)\right)^{p-2} \int_\Omega \left(f(s) - \int_\Omega f(s)\, d\mu(s)\right)^2 d\mu(s)\end{aligned} \tag{3.4}$$

holds.

Theorem 3, which is another refinement of Hölder inequality, follows in the same way that Hölder's inequality follows from Jensen's inequality by fixing a non-negative ν-measurable functions f and g and applying (3.4) with fg^{1-q} in place of f and $\frac{g^q d\nu}{\int_\Omega g^q d\nu}$ in place of $d\mu$ where $\frac{1}{p} + \frac{1}{q} = 1$:

THEOREM 3. *Let $p \geqslant 2$ and define q by $\frac{1}{p}+\frac{1}{q}=1$. Then for any two nonnegative ν-measurable functions f and g*

$$\begin{aligned}&\int_\Omega fg d\nu \\ &\leqslant \left(\int_\Omega f^p d\nu-(p-1)\left(\frac{\int_\Omega fg d\nu}{\int_\Omega g^q d\nu}\right)^{p-2}\int_\Omega\left(fg^{(1-q)}-\frac{\int_\Omega fg d\nu}{\int_\Omega g^q d\nu}\right)^2 g^q d\nu\right)^{\frac{1}{p}} \\ &\quad\times\left(\int_\Omega g^q d\nu\right)^{\frac{1}{q}}.\end{aligned} \tag{3.5}$$

If $1<p\leqslant 2$ we get when $\int_\Omega f^p d\nu \geqslant (p-1)\left(\frac{\int_\Omega fg d\nu}{\int_\Omega g^q d\nu}\right)^{p-2}\int_\Omega\left(fg^{(1-q)}-\frac{\int_\Omega fg d\nu}{\int_\Omega g^q d\nu}\right)^2 g^q d\nu$, that

$$\begin{aligned}&\left(\int_\Omega f^p d\nu\right)^{\frac{1}{p}}\left(\int_\Omega g^q d\nu\right)^{\frac{1}{q}} \\ &\geqslant \int_\Omega fg d\nu \\ &\geqslant \left(\int_\Omega f^p d\nu-(p-1)\left(\frac{\int_\Omega fg d\nu}{\int_\Omega g^q d\nu}\right)^{p-2}\int_\Omega\left(fg^{(1-q)}-\frac{\int_\Omega fg d\nu}{\int_\Omega g^q d\nu}\right)^2 g^q d\nu\right)^{\frac{1}{p}} \\ &\quad\times\left(\int_\Omega g^q d\nu\right)^{\frac{1}{q}}.\end{aligned} \tag{3.6}$$

The last inequalities emphasize that through the 1-quasiconvexity and 1-quasiconcavity notions we get refined Hölder inequality for $p\geqslant 2$ in (3.5) and a lower bound in (3.6) for $1<p\leqslant 2$.

From Remark 1 it follows that:

THEOREM 4. *Under the same conditions as in Theorems 2 and 3 we get that the refinement of Hölder inequality derived from the 1-quasiconvexity of x^p, $x\geqslant 0$, $p\geqslant 2$ is better that the refinement derived from its superquadracity when $0\leqslant fg^{(1-q)}\leqslant 2\frac{\int_\Omega fg d\nu}{\int_\Omega g^q d\nu}$ that is we get that*

$$\begin{aligned}\int_\Omega fg d\nu &\leqslant \left(\int_\Omega f^p d\nu-\Delta_1\right)^{\frac{1}{p}}\left(\int_\Omega g^q d\nu\right)^{\frac{1}{q}} \\ &\leqslant \left(\int_\Omega f^p d\nu-\Delta_2\right)^{\frac{1}{p}}\left(\int_\Omega g^q d\nu\right)^{\frac{1}{q}},\end{aligned}$$

where

$$\Delta_1=(p-1)\left(\frac{\int_\Omega fg d\nu}{\int_\Omega g^q d\nu}\right)^{p-2}\int_\Omega\left(fg^{(1-q)}-\frac{\int_\Omega fg d\nu}{\int_\Omega g^q d\nu}\right)^2 g^q d\nu$$

and

$$\Delta_2 = \int_\Omega \left| fg^{(1-q)} - \frac{\int_\Omega fgd\nu}{\int_\Omega g^q d\nu} \right|^p g^q d\nu.$$

From Lemma E we get a two sided Hölder type inequality:

THEOREM 5. *Let* $0 < p \leqslant 1$, f *and* g *be non-negative* μ*-measurable functions on the probability measure space* (Ω, ν) *then*

$$\begin{aligned} &\left(\int_\Omega f^p d\nu\right)^{\frac{1}{p}} \left(\int_\Omega g^q d\nu\right)^{\frac{1}{q}} \\ &\leqslant \int_\Omega fgd\nu \\ &\leqslant \left(\int_\Omega f^p d\nu + p\left(\frac{\int_\Omega fgd\nu}{\int_\Omega g^q d\nu}\right)^{p-1} \int_\Omega \left(fg^{(1-q)} - \frac{\int_\Omega fgd\nu}{\int_\Omega g^q d\nu}\right)^2 \frac{g^{2q-1}}{f} d\nu\right)^{\frac{1}{p}} \\ &\quad \times \left(\int_\Omega g^q d\nu\right)^{\frac{1}{q}}. \end{aligned} \tag{3.7}$$

Proof. To get a refinement of Hölder inequality, from Lemma E we fix as before a non-negative ν-measurable functions f and g and apply (3.1) and (3.2) with fg^{1-q} in place of f and $\frac{g^q d\nu}{\int_\Omega g^q d\nu}$ in place of $d\mu$ where $\frac{1}{p} + \frac{1}{q} = 1$ and get the right side of (3.7) by a simple computation, and together with Hölder inequality for $0 < p \leqslant 1$ which says that

$$\left(\int_\Omega f^p d\nu\right)^{\frac{1}{p}} \left(\int_\Omega g^q d\nu\right)^{\frac{1}{q}} \leqslant \int_\Omega fgd\nu$$

(3.7) is obtained. □

Similarly we get from Lemma D that

THEOREM 6. *Let* $0 < p \leqslant 1$, f *and* g *be non-negative* μ*-measurable functions on the probability measure space* (Ω, ν), *then*

$$\begin{aligned} &\int_\Omega fgd\nu \\ &\leqslant \left(\int_\Omega f^p d\nu + p\left(\frac{\int_\Omega fgd\nu}{\int_\Omega g^q d\nu}\right)^p \left(\int_\Omega g^q d\nu - \frac{\int_\Omega fgd\nu}{\int_\Omega g^q d\nu} \int_\Omega \frac{g^{2q-1}}{f} d\nu\right)\right)^{\frac{1}{p}} \\ &\quad \times \left(\int_\Omega g^q d\nu\right)^{\frac{1}{q}}. \end{aligned}$$

Hölder type inequality for $0 < p \leqslant \frac{1}{2}$ and for $\frac{1}{2} \leqslant p < 1$ which we get now are derived again from the theorems related to 1-quasiconvex functions but are obtained by different substitutions that those employed up to now.

THEOREM 7. *Let* $0 < p \leqslant \frac{1}{2}$ *and define* $\frac{1}{p} + \frac{1}{q} = 1$. *then for any positive* ν-*measurable function* f *and* g

$$\int_\Omega fg d\nu \geqslant \left(\int_\Omega f^p d\nu\right)^{\frac{1}{p}} \left(\int_\Omega g^q d\nu\right)^{\frac{1}{q}} \times \left[1 + \left(\frac{1}{p} - 1\right) \int_\Omega \left(\frac{f^p \int_\Omega g^q d\nu - g^q \int_\Omega f^p d\nu}{\int_\Omega f^p d\nu}\right)^2 \frac{g^{-q}}{\int_\Omega g^q d\nu} d\nu\right] \tag{3.8}$$

is derived, which is a refinement of Hölder inequality.

For $\frac{1}{2} \leqslant p < 1$, *we get the reverse of inequality (3.8) and together with Hölder inequality for* $0 < p < 1$

$$\begin{aligned} &\left(\int_\Omega g^q d\nu\right)^{\frac{1}{q}} \left(\int_\Omega f^p d\nu\right)^{\frac{1}{p}} \\ &\leqslant \int_\Omega fg d\nu \\ &\leqslant \left(\int_\Omega g^q d\nu\right)^{\frac{1}{q}} \left(\int_\Omega f^p d\nu\right)^{\frac{1}{p}} \\ &\quad \times \left[1 + \left(\frac{1}{p} - 1\right) \int_\Omega \left(\frac{f^p \int_\Omega g^q d\nu - g^q \int_\Omega f^p d\nu}{\int_\Omega f^p d\nu}\right)^2 \frac{g^{-q}}{\int_\Omega g^q d\nu} d\nu\right] \end{aligned} \tag{3.9}$$

is derived.

Proof. For simplicity we denote $\int_\Omega$ as $\int$. For $\frac{1}{p} \geqslant 2$ we use the inequality for the 1-quasiconvex function $x^{\frac{1}{p}}$

$$\int f^{\frac{1}{p}} d\mu \geqslant \left(\int f d\mu\right)^{\frac{1}{p}} \left(1 + \left(\frac{1}{p} - 1\right) \int \left(\frac{f - \int f d\mu}{\int f d\mu}\right)^2 d\mu\right). \tag{3.10}$$

We fix now non-negative ν measurable functions f and g and apply (3.10) with $f^p g^{-q}$ in place of f and $d\mu = \frac{g^q d\nu}{\int g^q d\nu}$. Therefore $\int f d\mu$ is replaced by $\frac{\int f^p d\nu}{\int g^q d\nu}$, $\int f^{\frac{1}{p}} d\mu$ is replaced by $\frac{\int fg d\nu}{\int g^q d\nu}$, and apply (3.10) and get

$$\frac{\int fg d\nu}{\int g^q d\nu} \geqslant \left(\frac{\int f^p d\nu}{\int g^q d\nu}\right)^{\frac{1}{p}} \left[1 + \left(\frac{1}{p} - 1\right) \int \left(\frac{f^p g^{-q} - \frac{\int f^p d\nu}{\int g^q d\nu}}{\frac{\int f^p d\nu}{\int g^q d\nu}}\right)^2 \frac{g^q}{\int g^q d\nu} d\nu\right]. \tag{3.11}$$

from which (3.8) is obtained.

The proof of (3.9) is similar using the 1-quasiconcavity of $x^{\frac{1}{p}}$, $\frac{1}{2} \leqslant p < 1$. □

Similarly, using the superquadracity of $x^{\frac{1}{p}}$, $x \geqslant 0$, $\frac{1}{p} \geqslant 2$ and the subquadracity of $x^{\frac{1}{p}}$, $1 \leqslant \frac{1}{p} \leqslant 2$ and under the same condition as in 7 we get in a similar way when

$0 < p \leqslant \frac{1}{2}$ the inequality

$$\int fg d\nu \geqslant \left(\int f^p d\nu\right)^{\frac{1}{p}} \left(\int g^p d\nu\right)^{\frac{1}{q}} \times \left[1 + \int \left|\frac{f^p \int g^q d\nu - g^q \int f^p d\nu}{\int f^p d\nu}\right|^{\frac{1}{p}} \frac{g d\nu}{\int g^p d\nu}\right]$$

and the reverse inequality holds when $\frac{1}{2} \leqslant p < 1$, and together with Hölder inequality for $0 < p < 1$ we get

$$\begin{aligned}\left(\int f^p d\nu\right)^{\frac{1}{p}} \left(\int g^p d\nu\right)^{\frac{1}{q}} &\leqslant \int fg d\nu \\ &\leqslant \left(\int f^p d\nu\right)^{\frac{1}{p}} \left(\int g^p d\nu\right)^{\frac{1}{q}} \\ &\quad \times \left[1 + \int \left|\frac{f^p \int g^q d\nu - g^q \int f^p d\nu}{\int f^p d\nu}\right|^{\frac{1}{p}} \frac{g d\nu}{\int g^p d\nu}\right]\end{aligned}$$

4. Minkowski type inequalities using 1-quasiconvexity

By using Theorem 3 we get Minkowski type inequalities:

THEOREM 8. *Let $p \geqslant 2$ and let $\frac{1}{q} = 1 - \frac{1}{p}$. Then for any two non-negative ν-measurable functions f and g*

$$\begin{aligned}\left(\int (f+g)^p d\nu\right)^{\frac{1}{p}} \leqslant &\left(\int f^p d\nu - D\left(\int f(f+g)^{p-1} d\nu\right)^{p-2}\right)^{\frac{1}{p}} \\ &+ \left(\int g^p d\nu - D\left(\int g(f+g)^{p-1} d\nu\right)^{p-2}\right)^{\frac{1}{p}}\end{aligned} \tag{4.1}$$

where

$$D = (p-1)\left(\int \left(\frac{\left(g \int f(f+g)^{p-1} d\nu - f \int g(f+g)^{p-1} d\nu\right)^2 (f+g)^{p-2}}{\left(\int (f+g)^p d\nu\right)^p}\right) d\nu\right). \tag{4.2}$$

Proof. Inequality (4.1) follows from inequality (3.5) in the same way that Minkowski's inequality follows from Hölder's and as Minkowski's inequality for superquadratic functions x^p, $p \geqslant 2$, $x \geqslant 0$ follows from Hölder's inequality for superquadratic functions (see [18]).

Let $p \geqslant 2$ and apply (3.5) with g replaced by $(f+g)^{p-1}$ and we get

$$\int f(f+g)^{p-1}\,d\nu \leqslant \left(\int (f+g)^p\,d\nu\right)^{\frac{1}{q}} \times \left[\int f^p d\nu - (p-1)\left(\frac{\int f(f+g)^{p-1}\,d\nu}{\int (f+g)^p\,d\nu}\right)^{p-2} \times \int \left(\frac{f}{f+g} - \frac{\int f(f+g)^{p-1}\,d\nu}{\int (f+g)^p\,d\nu}\right)^2 (f+g)^p\,d\nu\right]^{\frac{1}{p}}.$$

Interchanging the roles of f and g yields

$$\int g(f+g)^{p-1}\,d\nu \leqslant \left(\int (f+g)^p\,d\nu\right)^{\frac{1}{q}} \left[\int g^p d\nu - (p-1)\left(\frac{\int g(f+g)^{p-1}\,d\nu}{\int (f+g)^p\,d\nu}\right)^{p-2} \times \int \left(\frac{g}{f+g} - \frac{\int g(f+g)^{p-1}\,d\nu}{\int (f+g)^p\,d\nu}\right)^2 (f+g)^p\,d\nu\right]^{\frac{1}{p}}.$$

Adding the last two inequalities gives after simple computation Inequality (4.1). □

The following Theorem 9 follows from inequality (3.6) by a similar argument as Theorem 8 follows from inequality (3.5).

THEOREM 9. *Let $1 < p \leqslant 2$ and let $\frac{1}{q} = 1 - \frac{1}{p}$. Then for any two non-negative ν-measurable functions f and g*

$$\left(\int f^p d\nu\right)^{\frac{1}{p}} + \left(\int g^p d\nu\right)^{\frac{1}{p}} \geqslant \left(\int (f+g)^p\,d\nu\right)^{\frac{1}{p}} \tag{4.3}$$
$$\geqslant \left(\int f^p d\nu - D\left(\int f(f+g)^{p-1}\,d\nu\right)^{p-2}\right)^{\frac{1}{p}} + \left(\int g^p d\nu - D\left(\int g(f+g)^{p-1}\,d\nu\right)^{p-2}\right)^{\frac{1}{p}}$$

where

$$D = (p-1)\left(\int \left(\frac{\left(g\int f(f+g)^{p-1}\,d\nu - f\int g(f+g)^{p-1}\,d\nu\right)^2 (f+g)^{p-2}}{(\int (f+g)^p\,d\nu)^p}\right) d\nu\right). \tag{4.4}$$

and $\int f^p d\nu \geqslant D\left(\int f(f+g)^{p-1}\,d\nu\right)^{p-2}$, $\int g^p d\nu \geqslant D\left(\int g(f+g)^{p-1}\,d\nu\right)^{p-2}$.

Now we get Minkowski's type inequalities when $0 < p \leqslant \frac{1}{2}$ and when $\frac{1}{2} \leqslant p < 1$.

THEOREM 10. *Let* $0 < p \leqslant \frac{1}{2}$ *and define* $\frac{1}{p} + \frac{1}{q} = 1$. *Then for any two non-negative* ν*-measurable functions* f *and* g

$$\begin{aligned}
&\left(\int (f+g)^p \, d\nu\right)^{\frac{1}{p}} \\
&\geqslant \left(\int f^p d\nu\right)^{\frac{1}{p}} \\
&\quad \times \left[1 + \left(\frac{1}{p} - 1\right) \int \left(\frac{(f+g)^p \int f^p d\nu - f^p \int (f+g)^p \, d\nu}{\int f^p d\nu}\right)^2 \frac{(f+g)^{-p}}{\int (f+g)^p \, d\nu} d\nu\right] \\
&\quad + \left(\int g^p d\nu\right)^{\frac{1}{p}} \\
&\quad \times \left[1 + \left(\frac{1}{p} - 1\right) \int \left(\frac{(f+g)^p \int g^p d\nu - g^p \int (f+g)^p \, d\nu}{\int g^p d\nu}\right)^2 \frac{(f+g)^{-p}}{\int (f+g)^p \, d\nu} d\nu\right].
\end{aligned} \tag{4.5}$$

When $\frac{1}{2} \leqslant p < 1$ *we get*

$$\begin{aligned}
&\left(\int f^p d\nu\right)^{\frac{1}{p}} + \left(\int g^p d\nu\right)^{\frac{1}{p}} \\
&\leqslant \left(\int (f+g)^p \, d\nu\right)^{\frac{1}{p}} \\
&\leqslant \left(\int f^p d\nu\right)^{\frac{1}{p}} \\
&\quad \times \left[1 + \left(\frac{1}{p} - 1\right) \int \left(\frac{(f+g)^p \int f^p d\nu - f^p \int (f+g)^p \, d\nu}{\int f^p d\nu}\right)^2 \frac{(f+g)^{-p}}{\int (f+g)^p \, d\nu} d\nu\right] \\
&\quad + \left(\int g^p d\nu\right)^{\frac{1}{p}} \\
&\quad \times \left[1 + \left(\frac{1}{p} - 1\right) \int \left(\frac{(f+g)^p \int g^p d\nu - g^p \int (f+g)^p \, d\nu}{\int g^p d\nu}\right)^2 \frac{(f+g)^{-p}}{\int (f+g)^p \, d\nu} d\nu\right].
\end{aligned} \tag{4.6}$$

Proof. We use inequality (3.10) for $\frac{1}{p} > 2$ to get (4.5). We fix non-negative ν-measurable functions f and g and apply (3.10) with $\left(\frac{f}{f+g}\right)^p$ in place of f and $d\mu = \frac{(f+g)^p d\nu}{\int (f+g)^p d\nu}$. Therefore $\frac{\int f^p d\nu}{\int (f+g)^p d\nu}$ is in place of $\int f d\mu$, $\frac{f}{f+g}$ is in place of $f^{\frac{1}{p}}$,

$\frac{\int f(f+g)^{p-1}d\nu}{\int (f+g)^p d\nu}$ is in place of $\int f^{\frac{1}{p}} d\mu$ and get

$$\begin{aligned}
&\frac{\int f\,(f+g)^{p-1}\,d\nu}{\int (f+g)^p\,d\nu} \\
&\geqslant \left(\frac{\int f^p d\nu}{\int (f+g)^p\,d\nu}\right)^{\frac{1}{p}} \\
&\quad\times\left[1+\left(\frac{1}{p}-1\right)\int\left(\frac{(f+g)^{-p}f^p-\int f^p\left(\int (f+g)^p\,d\nu\right)^{-1}}{\int f^p d\nu\left(\int (f+g)^p\,d\nu\right)^{-1}}\right)^2\frac{(f+g)^p}{\int (f+g)^p\,d\nu}d\nu\right].
\end{aligned} \tag{4.7}$$

Interchanging the roles of f and g yields

$$\begin{aligned}
&\frac{\int g\,(f+g)^{p-1}\,d\nu}{\int (f+g)^p\,d\nu} \\
&\geqslant \left(\frac{\int g^p d\nu}{\int (f+g)^p\,d\nu}\right)^{\frac{1}{p}} \\
&\quad\times\left[1+\left(\frac{1}{p}-1\right)\int\left(\left(\frac{(f+g)^{-p}g^p-\int g^p\left(\int (f+g)^p\,d\nu\right)^{-1}}{\int g^p d\nu\left(\int (f+g)^p\,d\nu\right)^{-1}}\right)^2\frac{(f+g)^p}{\int (f+g)^p\,d\nu}\right)d\nu\right].
\end{aligned} \tag{4.8}$$

Adding the last two inequalities gives (4.5). Similarly together with Minkowski's inequality for $0<p<1$ we get (4.6) for $\frac{1}{2}\leqslant p<1$. $\square$

5. Jensen and Slater-Pečarić type inequalities for Steffensen's coefficients

In Section 2 we dealt with Jensen's type and Slater-Pečarić type inequalities when the coefficients $\alpha_i \geqslant 0,\ i=1,\ldots,n$.

We prove now a Jensen-Steffensen type inequality and a Slater-Pečarić type inequality for N-quasiconvex functions, when N is an integer, and the coefficients are not necessarily non-negative.

An extension of Jensen Steffensen inequality is proved in [2] for a non-negative superquadratic function which is therefore also increasing and convex:

THEOREM 11. *Let $\psi:[0,\infty)\to\mathbb{R}$ be differentiable superquadratic and nonnegative. Let $\boldsymbol{x}$ be a nonnegative monotonic n-tuple in $\mathbb{R}^n$, and $\boldsymbol{\rho}$ a real n-tuple satisfying Steffensen's coefficients. Let $\overline{x}$ be defined by $\overline{x}=\frac{1}{P_n}\sum_{i=1}^n \rho_i x_i$. Then*

$$\begin{aligned}
\sum_{i=1}^n \rho_i\psi(x_i)-P_n\psi(\overline{x}) \geqslant \sum_{j=1}^{k-1} P_j\psi\left(\left|x_j-x_{j+1}\right|\right)+P_k\psi(|x_k-\overline{x}|) \\
+\overline{P}_{k+1}\psi(|x_{k+1}-\overline{x}|)+\sum_{j=k+2}^n \overline{P}_j\psi\left(\left|x_j-x_{j-1}\right|\right)
\end{aligned}$$

$$\geqslant \left(\sum_{i=1}^{k} P_i + \sum_{i=k+1}^{n} \overline{P}_i\right) \psi\left(\frac{\sum_{i=1}^{n} \rho_i \left(|x_i - \overline{x}|\right)}{\sum_{i=1}^{k} P_i + \sum_{i=k+1}^{n} \overline{P}_i}\right)$$
$$\geqslant \left((n-1)P_n\right) \psi\left(\frac{\sum_{i=1}^{n} \rho_i \left(|x_i - \overline{x}|\right)}{(n-1)P_n}\right)$$

holds where $k \in \{1,\ldots,n-1\}$ *satisfies* $x_k \leqslant \overline{x} \leqslant x_{k+1}$, *unless one of the following two cases occurs:*

(1) either $\overline{x} = x_1$ *or* $\overline{x} = x_n$,

(2) there exists $k \in \{3,\ldots,n-2\}$ *such that* $\overline{x} = x_k$ *and* $P_j\left(x_j - x_{j+1}\right) = 0$, $j = 1,\ldots,k-1$, $\overline{P}_j\left(x_j - x_{j-1}\right) = 0$, $j = k+1,\ldots,n$.

In these two cases $\sum_{i=1}^{n} \rho_i \psi(x_i) - P_n \psi(\overline{x}) = 0$.

An extension of Slater-Pečarić inequality is proved in [2], for a non-negative superquadratic function which is therefore also increasing and convex:

THEOREM 12. [2] *Let* $\psi : [0,\infty) \to \mathbb{R}$ *be a differentiable nonnegative superquadratic function. Let* $\boldsymbol{\rho} = (\rho_1,\ldots,\rho_n)$ *be Jensen-Steffensen coefficients and* $\boldsymbol{x} = (x_1,\ldots,x_n)$ *be a non-negative increasing* n*-tuple. If* $\sum_{i=1}^{n} \rho_i \psi'(x_i) \neq 0$ *we define* $M = \frac{\sum_{i=1}^{n} \rho_i x_i \psi'(x_i)}{\sum_{i=1}^{n} \rho_i \psi'(x_i)}$. *Then:*

Case A: for s *satisfying* $x_s \leqslant M \leqslant x_{s+1}$, $s+1 \leqslant n$,

$$\sum_{i=1}^{n} \rho_i \psi(x_i)$$
$$\leqslant P_n \psi(M) - \left(\sum_{j=1}^{s-1} P_j \psi(x_{j+1} - x_j) + P_s \psi(M - x_s) + \overline{P}_{s+1} \psi(x_{s+1} - M) + \sum_{j=s+2}^{n} \overline{P}_j \psi(x_j - x_{j-1})\right)$$
$$\leqslant P_n \psi(M) - \left(\sum_{j=1}^{s} P_j + \sum_{j=s+1}^{n} \overline{P}_j\right) \psi\left(\frac{\sum_{i=1}^{n} \rho_i |x_i - M|}{\sum_{j=1}^{s} P_j + \sum_{j=s+1}^{n} \overline{P}_j}\right)$$
$$\leqslant P_n \psi(M) - \left((n-1)P_n\right) \psi\left(\frac{\sum_{i=1}^{n} \rho_i |x_i - M|}{(n-1)P_n}\right)$$

holds, unless one of the following two cases occurs:

(1) either $\overline{x} = x_1$ *or* $\overline{x} = x_n$,

(2) there exists $k \in \{3,\ldots,n-2\}$ *such that* $\overline{x} = x_k$ *and* $P_j\left(x_j - x_{j+1}\right) = 0$, $j = 1,\ldots,s-1$,$\overline{P}_j\left(x_j - x_{j-1}\right) = 0$, $j = s+1,\ldots,n$. *In these two cases* $\sum_{i=1}^{n} \rho_i \psi(x_i) - P_n \psi\left(M_{\psi_N}\right) = 0$.

Case B: for $M > x_n$: $\sum_{i=1}^{n} \rho_i \psi(x_i) \leqslant P_n \psi(M) - (nP_n) \psi\left(\frac{\sum_{i=1}^{n} \rho_i |x_i - M|}{nP_n}\right)$.

For 1-quasiconvex function ψ we present a Jensen's type inequality obtained in [7, Theorem 3]:

THEOREM 13. *Let $\rho_1,\ldots,\rho_n$ be Jensen-Steffensen coefficients, that is, $0 \leqslant P_k = \sum_{i=1}^{k}\rho_i \leqslant P_n$, $\overline{P}_k = \sum_{i=k}^{n}\rho_i \geqslant 0$, $P_n > 0$, $k = 1,\ldots,n$, and let $\mathbf{x} = (x_1,\ldots,x_n) > 0$ satisfy $0 < x_1 \leqslant \ldots \leqslant x_n$. Let φ be non-negative, increasing differentiable convex function defined on $x \geqslant 0$, and let $\psi(x) = x\varphi(x)$. Let $\overline{x} = \sum_{i=1}^{n}\frac{\rho_i x_i}{P_n}$. Let s be the integer that satisfies $0 < x_s \leqslant \overline{x} \leqslant x_{s+1} \leqslant x_n$. Then we get*

$$\begin{aligned}
&\sum_{i=1}^{n}\rho_i\psi(x_i) - P_n\psi(\overline{x}) \\
&\geqslant \varphi'(x_1)\left(\sum_{j=1}^{s}P_j + \sum_{j=s+1}\overline{P}_j\right)\left(\frac{\sum_{i=1}^{n}\rho_i|x_i-\overline{x}|}{\sum_{j=1}^{s}P_i + \sum_{j=s+1}^{n}\overline{P}_j}\right)^2 \\
&\geqslant \varphi'(x_1)P_n\max\{s,n-s\}\left(\frac{\sum_{i=1}^{n}\rho_i|x_i-\overline{x}|}{P_n\max\{s,n-s\}}\right)^2 \\
&\geqslant \varphi'(x_1)(n-1)P_n\left(\frac{\sum_{i=1}^{n}\rho_i|x_i-\overline{x}|}{(n-1)P_n}\right)^2 \geqslant 0.
\end{aligned}$$

We state now a Jensen-Steffensen type inequality and Slater Pečarić type inequality for N-quasiconvex functions, when N is an integer. The proof of this theorem uses (1.3) and some of the techniques used in [2]. This is done using identity (1.6) for the convex function ψ_N.

THEOREM 14. *Let $\rho_1,\ldots,\rho_n$ be Jensen-Steffensen coefficients, and let $\mathbf{x} = (x_1,\ldots,x_n)$ satisfy $0 < x_1 \leqslant \ldots \leqslant x_n$. Let φ be non-negative, increasing differentiable convex function defined on $x \geqslant 0$, and let $\psi_N(x) = x^N\varphi(x)$ where N is an integer. Let $\overline{x} = \sum_{i=1}^{n}\frac{\rho_i x_i}{P_n}$. Let s be the integer that satisfies $0 < x_s \leqslant \overline{x} \leqslant x_{s+1} \leqslant x_n$. Then*

$$\begin{aligned}
&\sum_{i=1}^{n}\rho_i\psi_N(x_i) - P_n\psi_N(\overline{x}) \qquad (5.1)\\
&\geqslant \sum_{k=1}^{N}x_1^{k-1}\psi'_{N-k}(x_1)\left(\sum_{j=1}^{s}P_j + \sum_{j=s+1}\overline{P}_j\right)\left(\frac{\sum_{j=1}^{n}\rho_j|x_j-\overline{x}|}{\sum_{j=1}^{s}P_j + \sum_{j=s+1}^{n}\overline{P}_j}\right)^2 \\
&= \left(\sum_{j=1}^{s}P_j + \sum_{j=s+1}\overline{P}_j\right)\left(\frac{\sum_{j=1}^{n}\rho_j|x_j-\overline{x}|}{\sum_{j=1}^{s}P_j + \sum_{j=s+1}^{n}\overline{P}_j}\right)^2\frac{\partial}{\partial x}\left(\frac{x^N - x_1^N}{x - x_1}\varphi(x)\right)/_{x=x_1} \\
&\geqslant (P_n\max\{s,n-s\})^{-1}\left(\sum_{i=1}^{n}\rho_i|x_i-\overline{x}|\right)^2\frac{\partial}{\partial x}\left(\frac{x^N - x_1^N}{x - x_1}\varphi(x)\right)/_{x=x_1} \\
&\geqslant ((n-1)P_n)^{-1}\left(\sum_{i=1}^{n}\rho_i|x_i-\overline{x}|\right)^2\frac{\partial}{\partial x}\left(\frac{x^N - x_1^N}{x - x_1}\varphi(x)\right)/_{x=x_1} \geqslant 0
\end{aligned}$$

holds, unless one of the following two cases occurs:

(1) either $\overline{x} = x_1$ or $\overline{x} = x_n$,

(2) *there exists* $k \in \{3,\ldots,n-2\}$ *such that* $\overline{x} = x_k$ *and* $P_j\left(x_j - x_{j+1}\right) = 0,\ j = 1,\ldots,k-1,\ \overline{P}_j\left(x_j - x_{j-1}\right) = 0,\ j = k+1,\ldots,n.$

In these two cases $\sum_{i=1}^{n} \rho_i \psi(x_i) - P_n \psi(\overline{x}) = 0.$

A refinement of Slater-Pečarić inequality in case that ψ_N is N-quasiconvex functions uses the same techniques as in Theorem 12 and in the proof of Theorem 13 is as follows:

THEOREM 15. *Under the same conditions as in Theorem 14 on* $(\rho_1,\ldots,\rho_n)$, *on* $(x_1,\ldots,x_n)$ *and on* $\psi_k(x) = x^k \varphi(x),\ k = 0,1,\ldots,N,$ *if* $\sum_{i=1}^{n} \rho_i \psi_N'(x_i) \neq 0,$ *we define* $M_{\psi_N} = \frac{\sum_{i=1}^{n} \rho_i x_i \psi_N'(x_i)}{\sum_{i=1}^{n} \rho_i \psi_N'(x_i)}$. *Then,*

Case A: for s *satisfying* $x_s \leqslant M_{\psi_N} \leqslant x_{s+1},\ s+1 \leqslant n,$

$$\begin{aligned}
&\sum_{i=1}^{n} \rho_i \psi_N(x_i) - P_n \psi_N\left(M_{\psi_N}\right) \qquad (5.2)\\
&\leqslant -\sum_{k=1}^{N} x_1^{k-1} \psi_{N-k}'(x_1) \left(\sum_{j=1}^{s} P_j + \sum_{j=s+1} \overline{P}_j\right) \left(\frac{\sum_{j=1}^{n} \rho_j \left|x_j - \overline{x}\right|}{\sum_{j=1}^{s} P_j + \sum_{j=s+1}^{n} \overline{P}_j}\right)^2\\
&= -\left(\sum_{j=1}^{s} P_j + \sum_{j=s+1} \overline{P}_j\right)^{-1} \left(\sum_{j=1}^{n} \rho_j \left|x_j - \overline{x}\right|\right)^2 \frac{\partial}{\partial x}\left(\frac{x^N - x_1^N}{x - x_1} \varphi(x)\right) /_{x=x_1}\\
&\leqslant -\left(P_n \max\{s, n-s\}\right)^{-1} \left(\sum_{i=1}^{n} \rho_i \left|x_i - \overline{x}\right|\right)^2 \frac{\partial}{\partial x}\left(\frac{x^N - x_1^N}{x - x_1} \varphi(x)\right) /_{x=x_1}\\
&\leqslant -\left((n-1)P_n\right)^{-1} \left(\sum_{i=1}^{n} \rho_i \left|x_i - \overline{x}\right|\right)^2 \frac{\partial}{\partial x}\left(\frac{x^N - x_1^N}{x - x_1} \varphi(x)\right) /_{x=x_1} \leqslant 0
\end{aligned}$$

holds, unless one of the following two cases occurs:

(1) *either* $\overline{x} = x_1$ *or* $\overline{x} = x_n,$

(2) *there exists* $k \in \{3,\ldots,n-2\}$ *such that* $\overline{x} = x_k$ *and* $P_j\left(x_j - x_{j+1}\right) = 0,\ j = 1,\ldots,s-1,\ \overline{P}_j\left(x_j - x_{j-1}\right) = 0,\ j = s+1,\ldots,n.$

In these two cases $\sum_{i=1}^{n} \rho_i \psi(x_i) - P_n \psi\left(M_{\psi_N}\right) = 0.$

Case B: for $M_{\psi_N} > x_n,$

$$\begin{aligned}
&\sum_{i=1}^{n} \rho_i \psi_N(x_i) - P_n \psi_N\left(M_{\psi_N}\right)\\
&\leqslant -\left(nP_n\right)^{-1} \left(\sum_{i=1}^{n} \rho_i \left|x_i - M_{\psi_N}\right|\right)^2 \frac{\partial}{\partial x}\left(\frac{x^N - x_1^N}{x - x_1} \varphi(x)\right) / x = x_1.
\end{aligned}$$

Proof (of Theorem 14). The proof follows step by step the proof of [7, Theorem 3]. Here we only replace $\varphi'(x_1)$ with $\frac{\partial}{\partial x}\left(\frac{x^N-x_1^N}{x-x_1}\varphi(x)\right)/_{x=x_1}$ which is non-negative when φ is non-negative increasing and convex. Therefore the detailed proof is omitted. □

Proof (of Theorem 15). It was proved in [1] that when $\boldsymbol{\rho}$ is satisfying (1.5), $\boldsymbol{x}$ is increasing, and ψ_N is non-negative increasing and convex and that $\sum_{i=1}^n \rho_i \psi_N'(x_i) > 0$, $\sum_{i=1}^n \rho_i x_i \psi_N'(x_i) \geqslant 0$, we get that $x_1 \leqslant \frac{\sum_{i=1}^n \rho_i x_i \psi_N'(x_i)}{\sum_{i=1}^n \rho_i \psi_N'(x_i)} = M_{\psi_N}$ holds.

Case A: For $x_1 \leqslant x_s \leqslant M_{\psi_N} \leqslant x_{s+1} \leqslant x_n$, we use identity (1.6) for $s \in \{1,\ldots,n-1\}$, and as $P_j \geqslant 0$, $\overline{P}_j \geqslant 0$, $j=1,\ldots,n$, and φ is non-negative increasing and convex function, we get that the N-quasiconvex function ψ_N satisfies

$$
\begin{aligned}
& P_n \psi_N\left(M_{\psi_N}\right) - \sum_{i=1}^n \rho_i \psi_N(x_i) \qquad (5.3)\\
&= \sum_{j=1}^{s-1} P_j\left(\psi_N\left(x_{j+1}\right) - \psi_N(x_j)\right) + P_s\left(\psi_N\left(M_{\psi_N}\right) - \psi_N(x_s)\right)\\
&\quad + \overline{P}_{s+1}\left(\psi_N\left(M_{\psi_N}\right) - \psi_N(x_{s+1})\right) + \sum_{j=s+2}^n \overline{P}_j\left(\psi_N\left(x_{j-1}\right) - \psi_N(x_j)\right)\\
&\geqslant \left[\sum_{j=1}^{s-1} P_j \psi_N'(x_j)\left(x_{j+1}-x_j\right) + P_s \psi_N'(x_s)\left(M_{\psi_N}-x_s\right)\right.\\
&\quad \left. + \overline{P}_{s+1}\psi_N'(x_{s+1})\left(M_{\psi_N}-x_{s+1}\right) + \sum_{j=s+2}^n \overline{P}_j \psi_N'(x_j)\left(x_{j-1}-x_j\right)\right]\\
&\quad + \left[\sum_{j=1}^{s-1} P_j\left(x_{j+1}-x_j\right)^2 \frac{\partial}{\partial x_j}\left(\frac{x_j^N - x_{j+1}^N}{x_j - x_{j+1}}\varphi(x_j)\right)\right.\\
&\quad + P_s\left(M_{\psi_N}-x_s\right)^2 \frac{\partial}{\partial x_s}\left(\frac{x_s^N - M_{\psi_N}^N}{x_s - M_{\psi_N}}\varphi(x_s)\right)\\
&\quad + \overline{P}_{s+1}\left(x_{s+1}-M_{\psi_N}\right)^2 \frac{\partial}{\partial x_{s+1}}\left(\frac{x_{s+1}^N - M_{\psi_N}^N}{x_{s+1} - M_{\psi_N}}\varphi(x_{s+1})\right)\\
&\quad \left. + \sum_{j=s+2}^n \overline{P}_j\left(x_j - x_{j-1}\right)^2 \frac{\partial}{\partial x_j}\left(\frac{x_j^N - x_{j-1}^N}{x_j - x_{j-1}}\varphi(x_j)\right)\right].
\end{aligned}
$$

It is shown in [2] that under our conditions on ρ, the first parenthesis in the right handside of (5.3) for the convex functions ψ_N is non-negative. Then from the N-quasiconvexity of ψ_N, the convexity of $f(x) = x^2$ we get from (5.3) that

$$
\begin{aligned}
& P_n \psi_N\left(M_{\psi_N}\right) - \sum_{i=1}^n \rho_i \psi_N(x_i)\\
&\geqslant [0] + \sum_{j=1}^{s-1} P_j\left(x_{j+1}-x_j\right)^2 \frac{\partial}{\partial x_j}\left(\frac{x_j^N - x_{j+1}^N}{x_j - x_{j+1}}\varphi(x_j)\right)
\end{aligned}
$$

$$
\begin{aligned}
&+P_s\left(M_{\psi_N}-x_s\right)^2\frac{\partial}{\partial x_s}\left(\frac{x_s^N-M_{\psi_N}^N}{x_s-M_{\psi_N}}\varphi\left(x_s\right)\right)\\
&+\overline{P}_{s+1}\left(x_{s+1}-M_{\psi_N}\right)^2\frac{\partial}{\partial x_{s+1}}\left(\frac{x_{s+1}^N-M_{\psi_N}^N}{x_{s+1}-M_{\psi_N}}\varphi\left(x_{s+1}\right)\right)\\
&+\sum_{j=s+2}^{n}\overline{P}_j\left(x_j-x_{j-1}\right)^2\frac{\partial}{\partial x_j}\left(\frac{x_j^N-x_{j-1}^N}{x_j-x_{j-1}}\varphi\left(x_j\right)\right)\\
\geqslant&\left(\sum_{j=1}^{s}P_j+\sum_{j=s+1}^{n}\overline{P}_j\right)\left(\frac{\sum_{j=1}^{s-1}P_j\left(x_{j+1}-x_j\right)+P_s\left(M_{\psi_N}-x_s\right)}{\sum_{j=1}^{s}P_j+\sum_{j=s+1}^{n}\overline{P}_j}\right.\\
&\left.+\frac{\overline{P}_{s+1}\left(x_{s+1}-M_{\psi_N}\right)+\sum_{j=s+2}^{n}\overline{P}_j\left(x_j-x_{j-1}\right)}{\sum_{j=1}^{s}P_j+\sum_{j=s+1}^{n}\overline{P}_j}\right)^2\frac{\partial}{\partial x}\left(\frac{x_1^N-x^N}{x_1-x}\varphi\left(x\right)\right)/x=x_1\\
=&\left(\sum_{j=1}^{s}P_j+\sum_{j=s+1}^{n}\overline{P}_j\right)^{-1}\left(\sum_{i=1}^{n}\rho_i\left|x_i-M_{\psi_N}\right|\right)^2\frac{\partial}{\partial x}\left(\frac{x_1^N-x^N}{x_1-x}\varphi\left(x\right)\right)/x=x_1
\end{aligned}
$$

In the same way as in the proof of the Theorem 13, we conclude that

$$
\begin{aligned}
&\left(\sum_{j=1}^{s}P_j+\sum_{j=s+1}^{n}\overline{P}_j\right)^{-1}\left(\sum_{j=1}^{n}\rho_i\left(\left|x_i-M\right|\right)\right)^2\\
&\geqslant\left((n-1)P_n\right)^{-1}\left(\sum_{i=1}^{n}\rho_i\left(\left|x_i-M_{\psi_N}\right|\right)\right)^2
\end{aligned}
$$

holds and hence we get (5.2).

The proof of the special cases (1) and (2) in the theorem are the same as the proofs of the equality cases in Theorem 2 and as proved in [1] and in [2].

Case B for $M>x_n$ is proved similarly to Case A.

Hence the proof of Theorem 15 is complete. □

Theorem 15, besides being a refinement of Slater-Pečarić inequality is also an analog of Theorem 12 which deals with non-negative superquadratic functions.

6. Bounds for differences of "Jensen's gap" for N-quasiconvex functions

In this section we state one of many results that can be derived from the previous theorems. First we quote a result from [3] about the difference between two "Jensen's gaps" $\sum_{i=1}^{n}p_i\psi\left(x_i\right)-\psi\left(\overline{x}_p\right)$ and $\sum_{i=1}^{n}q_i\psi\left(x_i\right)-\psi\left(\overline{x}_q\right)$. Then we present a new theorem with results when ψ is a N-quasiconvex function. In particular for a 1-quasiconvex function ψ the result is interesting.

The proofs in this section like the proofs in [3] employ some of the techniques used in [8].

In [3, Theorem 2] the following is proved:

THEOREM 16. *Suppose that* $\psi : I \to \mathbb{R}$, *where* I *is* $[0,a]$ *or* $[o,\infty)$ *is superquadratic. Let* $x_i \in I,\ i = 1,\dots,n,\ \overline{x}_p = \sum_{i=1}^n p_i x_i,\ p_i \geqslant 0,\ i = 1,\dots,n,\ \sum_{i=1}^n p_i = 1$ *and* $\overline{x}_q = \sum_{i=1}^n q_i x_i,\ q_i \geqslant 0,\ i = 1,\dots,n,\ \sum_{i=1}^n q_i = 1$. *Then, for* $m = \min\limits_{1\leqslant i\leqslant n}\left(\frac{p_i}{q_i}\right)$

$$\left(\sum_{i=1}^n p_i\psi(x_i) - \psi(\overline{x}_p)\right) - m\left(\sum_{i=1}^n q_i\psi(x_i) - \psi(\overline{x}_q)\right) \tag{6.1}$$
$$\geqslant m\psi\left(\left|\sum_{i=1}^n (q_i - p_i)x_i\right|\right) + \sum_{i=1}^n (p_i - mq_i)\,\psi\left(\left|x_i - \sum_{j=1}^n p_j x_j\right|\right)$$

and for $M = \max\limits_{1\leqslant i\leqslant n}\left(\frac{p_i}{q_i}\right)$

$$\left(\sum_{i=1}^n p_i\psi(x_i) - \psi(\overline{x}_p)\right) - M\left(\sum_{i=1}^n q_i\psi(x_i) - \psi(\overline{x}_q)\right) \tag{6.2}$$
$$\leqslant -\sum_{i=1}^n (Mq_i - p_i)\,\psi\left(\left|x_i - \sum_{j=1}^n q_j x_j\right|\right) - \psi\left(\left|\sum_{i=1}^n (p_i - q_i)x_i\right|\right).$$

If the superquadratic function is also nonnegative and therefore is also convex, then (6.1) and (6.2) refine the following theorem by Dragomir in [8]:

THEOREM 17. *Under the same conditions on* $\mathbf{p}$, $\mathbf{q}$, $\mathbf{x}$, $\overline{x}_p$, $\overline{x}_q$, m *and* M, *as in Theorem 16, if* ψ *is convex then*

$$M\left(\sum_{i=1}^n q_i\psi(x_i) - \psi(\overline{x}_q)\right) \geqslant \sum_{i=1}^n p_i\psi(x_i) - \psi(\overline{x}_p) \tag{6.3}$$
$$\geqslant m\left(\sum_{i=1}^n q_i\psi(x_i) - \psi(\overline{x}_q)\right).$$

Now we show another refinement of Theorem 17 this time for N-quasiconvex function ψ_N.

THEOREM 18. *Suppose that* $\psi_N : I \to \mathbb{R}$ *where* I *is* $[a,b)$, $0 \leqslant a,\ b \leqslant \infty$, *is* N-*quasiconvex function, that is* $\psi_N = x^N\varphi(x)$, $N = 1,2,\dots$ *where* φ *is convex on* $[a,b)$. *Let* $\mathbf{p}$, $\mathbf{q}$, $\mathbf{x}$, $\overline{x}_p$, $\overline{x}_q$, m *and* M *be as in Theorem 16, then*

$$\left(\sum_{i=1}^n p_i\psi_N(x_i) - \psi_N(\overline{x}_p)\right) - m\left(\sum_{i=1}^n q_i\psi_N(x_i) - \psi_N(\overline{x}_q)\right) \tag{6.4}$$
$$\geqslant \sum_{i=1}^n (p_i - mq_i)(x_i - \overline{x}_p)^2 \frac{\partial}{\partial\overline{x}_p}\left(\frac{x_i^N - \overline{x}_p^N}{x_i - \overline{x}_p}\varphi(\overline{x}_p)\right)$$
$$+ m(\overline{x}_q - \overline{x}_p)^2 \frac{\partial}{\partial\overline{x}_p}\left(\frac{\overline{x}_q^N - \overline{x}_p^N}{\overline{x}_q - \overline{x}_p}\varphi(\overline{x}_p)\right),$$

and

$$\left(\sum_{i=1}^{n} p_i \psi_N(x_i) - \psi_N(\overline{x}_p)\right) - M\left(\sum_{i=1}^{n} q_i \psi_N(x_i) - \psi_N(\overline{x}_q)\right) \tag{6.5}$$
$$\leqslant \sum_{i=1}^{n} (p_i - Mq_i)(x_i - \overline{x}_q)^2 \frac{\partial}{\partial \overline{x}_q}\left(\frac{x_i^N - \overline{x}_q^N}{x_i - \overline{x}_q}\varphi(\overline{x}_q)\right)$$
$$-M(\overline{x}_q - \overline{x}_p)^2 \frac{\partial}{\partial \overline{x}_q}\left(\frac{\overline{x}_q^N - \overline{x}_p^N}{\overline{x}_q - \overline{x}_p}\varphi(\overline{x}_q)\right).$$

For $N = 1$ we get that

$$\left(\sum_{i=1}^{n} p_i \psi_1(x_i) - \psi_1(\overline{x}_p)\right) - m\left(\sum_{i=1}^{n} q_i \psi_1(x_i) - \psi_1(\overline{x}_q)\right) \tag{6.6}$$
$$\geqslant \varphi'(\overline{x}_p)\left(\left(\sum_{i=1}^{n} p_i x_i^2 - (\overline{x}_p)^2\right) - m\left(\sum_{i=1}^{n} q_i x_i^2 - (\overline{x}_q)^2\right)\right),$$

and

$$\left(\sum_{i=1}^{n} p_i \psi_1(x_i) - \psi_1(\overline{x}_p)\right) - M\left(\sum_{i=1}^{n} q_i \psi_1(x_i) - \psi_1(\overline{x}_q)\right) \tag{6.7}$$
$$\leqslant \varphi'(\overline{x}_q)\left(\left(\sum_{i=1}^{n} p_i x_i^2 - (\overline{x}_p)^2\right) - M\left(\sum_{i=1}^{n} q_i x_i^2 - (\overline{x}_q)^2\right)\right).$$

In particular if φ is also non-negative increasing then (6.4)–(6.7) are refinements of (6.3).

Proof. To prove (6.4) we define $\mathbf{y}$ and $\mathbf{d}$ as

$$y_i = \begin{cases} x_i, & i = 1,\ldots,n \\ \overline{x}_q, & i = n+1 \end{cases}, \qquad d_i = \begin{cases} p_i - mq_i, & i = 1,\ldots,n \\ m, & i = n+1 \end{cases}. \tag{6.8}$$

From (6.8) we get that $\overline{y} = \sum_{i=1}^{n+1} d_i y_i = \sum_{i=1}^{n} p_i x_i = \overline{x}_p$ Then (2.3) for $\mathbf{y}$ and $\mathbf{d}$ is

$$\left(\sum_{i=1}^{n} p_i \psi_N(x_i) - \psi_N(\overline{x}_p)\right) - m\left(\sum_{i=1}^{n} q_i \psi_N(x_i) - \psi_N(\overline{x}_q)\right)$$
$$= \sum_{i=1}^{n} (p_i - mq_i)\psi_N(x_i) + m\psi_N(\overline{x}_q) - \psi_N(\overline{x}_p)$$
$$= \sum_{i=1}^{n+1} d_i \psi_N(y_i) - \psi_N(\overline{x}_p) \geqslant \sum_{i=1}^{n+1} d_i (y_i - \overline{y})^2 \frac{\partial}{\partial \overline{y}}\left(\frac{\overline{y}^N - y_i^N}{\overline{y} - y_i}\varphi(\overline{y})\right).$$

which after using again (6.8) is (6.4).

To get (6.5), we choose $\mathbf{z}$ and $\mathbf{r}$ as

$$z_i = \begin{cases} x_i, & i = 1,\dots,n \\ \overline{x}_p, & i = n+1 \end{cases}, \qquad r_i = \begin{cases} q_i - \frac{p_i}{M}, & i = 1,\dots,n \\ \frac{1}{M}, & i = n+1 \end{cases}.$$

Then, as $\sum_{i=1}^{n+1} r_i = 1,\ r_i \geqslant 0,\ i = 1,\dots,n+1$ and $\sum_{i=1}^{n+1} r_i z_i = \sum_{i=1}^{n} q_i x_i = \overline{x}_q$, we get that

$$\begin{aligned}
&\left(\sum_{i=1}^{n} q_i \psi_N(x_i) - \psi_N(\overline{x}_q)\right) - \frac{1}{M}\left(\sum_{i=1}^{n} p_i \psi_N(x_i) - \psi_N(\overline{x}_p)\right) \\
&= \sum_{i=1}^{n}\left(q_i - \frac{p_i}{M}\right)\psi_N(x_i) + \frac{1}{M}\psi_N(\overline{x}_p) - \psi_N(\overline{x}_q) \\
&= \sum_{i=1}^{n+1} r_i \psi_N(z_i) - \psi_N\left(\sum_{i=1}^{n+1} r_i z_i\right) \\
&\geqslant \sum_{i=1}^{n}\left(q_i - \frac{p_i}{M}\right)(x_i - \overline{x}_q)^2 \frac{\partial}{\partial \overline{x}_q}\left(\frac{\overline{x}_q^N - x_i^N}{\overline{x}_q - x_i}\varphi(\overline{x}_q)\right) \\
&\quad + \frac{1}{M}(\overline{x}_p - \overline{x}_q)^2 \frac{\partial}{\partial \overline{x}_q}\left(\frac{\overline{x}_q^N - \overline{x}_p^N}{\overline{x}_q - \overline{x}_p}\varphi(\overline{x}_q)\right),
\end{aligned}$$

which is equivalent to (6.5). □

Acknowledgements. The author wish to thank L.-E. Persson whose many advices are as usual very useful and to the referee for the illuminating remarks.

REFERENCES

[1] S. ABRAMOVICH, M. KLARICIĆ BACULA, M. MATIĆ, AND J. PEČARIĆ, *A Variant of Jensen-Steffensen's Inequality and Quazi Arithmetic Means*, Journal of Mathematical Analysis and Applications, **307** (2005) 370–386.

[2] S. ABRAMOVICH, S. BANIĆ, M. MATIĆ AND J. PEČARIĆ, *Jensen Steffensen's and Related Inequalities, for Superquadratic Functions*, Mathematical Inequalities and Applications, **11**, (2008), pp. 23–41.

[3] S. ABRAMOVICH AND S. S. DRAGOMIR, *Normalized Jensen Functional, Superquadracity and Related Inequalities*, International Series of Numerical Mathematics, Birkhäuser Verlag, **157**, (2008) 217–228.

[4] S. ABRAMOVICH, G. JAMESON AND G. SINNAMON, *Refining Jensen's Inequality*, Bulletin Mathematique de la Societe des Sciences Mathematiques de Roumanie, (Novel Series) **47** (95), (2004), 3–14.

[5] S. ABRAMOVICH, L.-E. PERSSON, *Some new estimates of the "Jensen Gap"*, J. Inequal. Appl. (2016), 2016:39, 9 pp.

[6] S. ABRAMOVICH, L.-E. PERSSON, AND N. SAMKO, *Some new scales of refined Jensen and Hardy type inequalities*, Math. Inequal. Appl., **17**, (2014), 1105–1114.

[7] S. ABRAMOVICH, L.-E. PERSSON, AND N. SAMKO, *On γ-quasiconvexity, superquadracity and two-sided reversed Jensen type inequalities*, Math. Inequal. Appl. **18** (2), (2015), 615–627.

[8] S. S. DRAGOMIR, *Bounds for the normalised Jensen functional*, Bull. Austral. Math. Soc. **74** (2006), 471–478.

[9] G. H. HARDY, J. E. LITTLEWOOD AND G. PÓLYA, *Inequalities*, Cambridge University press, 1964.

[10] E. G. KWON AND J. E. BAE, *On a refined Hölder's inequality*, J. Math. Inequal., **10**, no. 1, (2016), 261–268.
[11] L. LARSSON, L. MALIGRANDA, J. PEČARIĆ AND L.-E. PERSSON, *Multiplicative inequalities of Carlson type and interpolation*, World Scientific 2006.
[12] J. MATKOWSKI, *Aconverse of Hölder inequality theorem*, Math. Inequal. Appl. **12**, no. 1, (2009), 21–32.
[13] C. NICULESCU AND L.-E. PERSSON, *Convex functions and their applications, a contemporary approach*, CMS books in mathematics, **23**, Springer New York, 2006.
[14] L. NIKOLOVA AND S. VAROŠANEC, *Refinement of Hölder's inequality derived from functions* $\psi_{p,q,\lambda}$ *and* $\phi_{p,q,\lambda}$, Ann. Funct. Anal, **2**, no. 1 (2011), 72–83.
[15] J. PEČARIĆ, F. PROSCHAN, Y. L. TONG, *Convex Functions*, Partial Orderings, and Statistical Applications, Academic Press, New York, 1992.
[16] L.-E. PERSSON AND N. SAMKO, *What should have happen if Hardy had discovered this?*, J. Inequal. Appl. (2012), 2012:29.
[17] L.-E. PERSSON, N. SAMKO AND P. WALL, *Quasi-monotone weight functions and their characteristics and applications*, Math. Inequal. Appl. **15** (2012) no. 3, 685–705.
[18] G. SINNAMON, *Refining the Hölder and Minkowski inequalities*, J. Inequal. and Appl. **6** (2001), 633–640.
[19] J.-F. TIAN, *Property of Hölder-type inequality and its application*, Math. Inequal. Appl. **16**, no. 3, (2013), 831–841.

(Received February 1, 2016)

Shoshana Abramovich
Department of Mathematics, University of Haifa
Israel
e-mail: abramos@math.haifa.ac.il

Mathematical
Inequalities
& Applications
Volume 19, Number 4 (2016), 1227–1246 doi:10.7153/mia-19-90

RECURSIVELY DEFINED REFINEMENTS OF THE INTEGRAL FORM OF JENSEN'S INEQUALITY

LÁSZLÓ HORVÁTH AND JOSIP PEČARIĆ

(*Communicated by C. P. Niculescu*)

Abstract. In this paper we establish infinite chains of integral inequalities related to the classical Jensen's inequality by using special refinements of the discrete Jensen's inequality. As applications, we introduce and study new integral means (generalized quasi-arithmetic means), and give refinements of the left hand side of Hermite-Hadamard inequality.

1. Introduction

The integral form and the discrete version of Jensen's inequality provide the starting point for much of the discussion in this paper. They can be stated as follows:

THEOREM A. (classical Jensen's inequality, see [7]) *Let g be an integrable function on a probability space $(X,\mathscr{A},\mu)$ taking values in an interval $I\subset\mathbb{R}$. Then $\int_X g\,d\mu$ lies in I. If f is a convex function on I such that $f\circ g$ is integrable, then*

$$f\left(\int_X g\,d\mu\right)\leqslant\int_X f\circ g\,d\mu.$$

THEOREM B. (discrete Jensen's inequality, see [7]) *Let C be a convex subset of a real vector space V, and let $f:C\to\mathbb{R}$ be a convex function. If $p_1,\dots,p_n$ are nonnegative numbers with $\sum_{i=1}^n p_i=1$, and $v_1,\dots,v_n\in C$, then*

$$f\left(\sum_{i=1}^n p_i v_i\right)\leqslant\sum_{i=1}^n p_i f(v_i).$$

Jensen obtained his famous inequality in [16]. There is an extensive theory for the study of refinements of the discrete Jensen's inequality, see [15], but there are only

Mathematics subject classification (2010): 26A51 (26D15).
Keywords and phrases: Classical and discrete Jensen's inequality, convex function, generalized quasi-arithmetic means, Hermite-Hadamard inequality.
The research of the 2nd author has been fully supported by Croatian Science Foundation under the project 5435.

Paper MIA-19-90

few papers dealing with refinements of the classical Jensen's inequality, see Rooin [18], Horváth [9] and Horváth and Pečarić [14]. In this paper we establish infinite chains of integral inequalities related to the classical Jensen's inequality. The key of our treatment is special refinements of the discrete Jensen's inequality which have been developed in Horváth [13]. As an immediate application, new infinite refinements of the classical Jensen's inequality are derived. We essentially follow the approach of Brnetić, Pearce and Pečarić [3], but our treatment is applicable in a more general environment. In Section 3 we consider our results in some interesting special cases. In Section 4 some new integral means (generalized quasi-arithmetic means) are introduced, and their properties are studied. Section 5 is devoted to refinements of the left hand side of Hermite-Hadamard inequality.

2. Preliminaries and the main inequalities

$\mathbb{N}$ and $\mathbb{N}_+$ denote the set of nonnegative and positive integers, respectively.

Before proceeding to the results we present some hypotheses, and an inequality from [13] which will be needed.

(H_1) Let $n \in \mathbb{N}_+$ be fixed, and denote

$$S_k := \left\{ (i_1, \ldots, i_n) \in \mathbb{N}_+^n \mid \sum_{j=1}^{n} i_j = n + k - 1 \right\}, \quad k \in \mathbb{N}_+. \tag{1}$$

(H_2) Let

$$(a_j(m))_{m \in \mathbb{N}_+}, \quad 1 \leqslant j \leqslant n$$

be strictly increasing sequences such that

$$\alpha := a_1(1) = \ldots = a_n(1) > 0. \tag{2}$$

(H_3) Let $p_1, \ldots, p_n$ be nonnegative numbers with $\sum_{j=1}^{n} p_j = 1$.

Under the hypotheses (H_1) and (H_2), define the finite sequences

$$(u_k(i_1, \ldots, i_n))_{(i_1, \ldots, i_n) \in S_k}, \quad k \in \mathbb{N}_+$$

recursively by

$$u_1(1, \ldots, 1) := \frac{1}{\alpha}, \tag{3}$$

and for every $(i_1, \ldots, i_n) \in S_{k+1}$ (see (1))

$$u_{k+1}(i_1, \ldots, i_n) := \sum_{\{l \in \{1, \ldots, n\} \mid i_l \neq 1\}} \frac{1}{1 + \frac{a_l(i_l - 1)}{a_l(i_l) - a_l(i_l - 1)} + \sum_{\substack{j=1 \\ j \neq l}}^{n} \frac{a_j(i_j)}{a_j(i_j + 1) - a_j(i_j)}}$$
$$\times \frac{a_l(i_l - 1)}{a_l(i_l) - a_l(i_l - 1)} u_k(i_1, \ldots, i_{l-1}, i_l - 1, i_{l+1}, \ldots, i_n).$$

Now we state one of the main results in [13].

THEOREM 1. *Assume (H_1–H_3). Let C be a convex subset of a real vector space X, and $\{x_1,\dots,x_n\}$ be a finite subset of C. If $f:C\to\mathbb{R}$ is a convex function, then*

$$f\left(\sum_{j=1}^{n}p_jx_j\right)=T_1\leqslant\ldots\leqslant T_k\leqslant T_{k+1}\leqslant\ldots\leqslant\sum_{j=1}^{n}p_jf(x_j),$$

where for each $k\in\mathbb{N}_+$

$$\begin{aligned}T_k &= T_{k,n}(x_1,\dots,x_n;p_1,\dots,p_n;a_1,\dots,a_n)\\ &:= \sum_{(i_1,\dots,i_n)\in S_k}u_k(i_1,\dots,i_n)\left(\sum_{j=1}^{n}a_j(i_j)\,p_j\right)f\left(\frac{\sum_{j=1}^{n}a_j(i_j)\,p_jx_j}{\sum_{j=1}^{n}a_j(i_j)\,p_j}\right).\end{aligned}$$

We follow this section by introducing some notations. Let $(X_i,\mathscr{B}_i,\mu_i)$ $(i\in T_l:=\{1,\dots,l\})$ be probability spaces for some $l\in\mathbb{N}_+$, $l\geqslant 2$. The σ-algebra in $X^{T_l}:=X_1\times\ldots\times X_l$ generated by the projection mappings

$$pr_i:X_1\times\ldots\times X_l\to X_i,\quad pr_i(x_1,\dots,x_l)=x_i\quad(i=1,\dots,l)$$

is denoted by $\mathscr{B}^{T_l}$. μ^{T_l} means the product measure on $\mathscr{B}^{T_l}$: this is the only measure on $\mathscr{B}^{T_l}$ (the measures are σ-finite) which satisfies

$$\mu^{T_l}(B_1\times\ldots\times B_l)=\mu_1(B_1)\ldots\mu_l(B_l),\quad B_i\in\mathscr{B}_i,\quad(i=1,\dots,l).$$

The l-fold product of the probability space $(X,\mathscr{B},\mu)$ is denoted by $\left(X^l,\mathscr{B}^l,\mu^l\right)$.

The following abbreviations will be used: $d\mu^{T_l}(\mathbf{x}):=d\mu^{T_l}(x_1,\dots,x_l)$ and $d\mu^l(\mathbf{x}):=d\mu^l(x_1,\dots,x_l)$.

λ^l is always means the Lebesgue measure on the Borel sets of $\mathbb{R}^l$.

Our first purpose is to obtain an extended and refined version of the classical Jensen's inequality.

THEOREM 2. *Assume (H_1–H_3). Suppose the following hypotheses are also hold*

(H_4) Let $(X_i,\mathscr{B}_i,\mu_i)$ $(i=1,\dots,n)$ be probability spaces.

(H_5) For each $i=1,\dots,n$, let g_i be a μ_i-integrable function on X_i taking values in an interval $I\subset\mathbb{R}$.

(H_6) Let f be a convex function on I such that $f\circ g_i$ is μ_i-integrable on X_i $(i=1,\dots,n)$.

Then

(a)

$$f\left(\sum_{i=1}^{n}p_i\int_{X_i}g_id\mu_i\right)\leqslant\mathscr{T}_1\leqslant\ldots\leqslant\mathscr{T}_k\leqslant\mathscr{T}_{k+1}\leqslant\ldots\leqslant\sum_{i=1}^{n}p_i\int_{X_i}f\circ g_id\mu_i,\tag{4}$$

where

$$\begin{aligned}\mathscr{T}_k &= \mathscr{T}_{k,n}(f;g_i;\mu_i;p_i;a_i)\\ &:= \sum_{(i_1,\ldots,i_n)\in S_k} u_k(i_1,\ldots,i_n)\left(\sum_{j=1}^n a_j(i_j)\,p_j\right)\\ &\quad\times\int_{X^{T_n}} f\left(\frac{\sum_{j=1}^n a_j(i_j)\,p_j g_j(x_j)}{\sum_{j=1}^n a_j(i_j)\,p_j}\right)d\mu^{T_n}(\mathbf{x}),\quad k\in\mathbb{N}_+.\end{aligned}\tag{5}$$

(b) For each $k\in\mathbb{N}_+$ and all $t\in[0,1]$

$$f\left(\sum_{i=1}^n p_i\int_{X_i} g_i d\mu_i\right)\leqslant H_k(0)\leqslant H_k(t)\leqslant\mathscr{T}_k,\tag{6}$$

where

$$\begin{aligned}H_k(t) &= H_{k,n}(t;f;g_i;\mu_i;p_i;a_i)\\ &:= \sum_{(i_1,\ldots,i_n)\in S_k} u_k(i_1,\ldots,i_n)\left(\sum_{j=1}^n a_j(i_j)\,p_j\right)\\ &\quad\times\int_{X^{T_n}} f\left(t\frac{\sum_{j=1}^n a_j(i_j)\,p_j g_j(x_j)}{\sum_{j=1}^n a_j(i_j)\,p_j}+(1-t)\frac{\sum_{j=1}^n a_j(i_j)\,p_j\int_{X_j} g_j d\mu_j}{\sum_{j=1}^n a_j(i_j)\,p_j}\right)d\mu^{T_n}(\mathbf{x}).\end{aligned}\tag{7}$$

REMARK 1. By (H_3–H_6), the hypotheses of Lemma 2.1 in [8] are all satisfied, and so it yields that all the integrals in (5) and (7) exist and finite.

Assume (H_1–H_6).

(a) If $n=1$, then $S_k=\{k\}$ and $u_k(k)=\frac{1}{a_1(k)}$ for all $k\in\mathbb{N}_+$, and therefore

$$\mathscr{T}_k=\mathscr{T}_1=\int_{X_1} f\circ g_1 d\mu_1,\quad k\in\mathbb{N}_+,$$

and

$$H_k(t)=H_1(t)=\int_{X_1} f\left(tg_1(x_1)+(1-t)\int_{X_1} g_1 d\mu_1\right)d\mu_1(x_1),\quad t\in[0,1],\quad k\in\mathbb{N}_+.$$

We can see that for $n=1$ (4) is trivial (the classical Jensen's inequality), while (6) gives

$$f\left(\int_{X_1} g_1 d\mu_1\right) = H_1(0) \leqslant H_1(t) \leqslant H_1(1) = \int_{X_1} f\circ g_1 d\mu_1, \quad t\in[0,1].$$

(b) Suppose $n\geqslant 2$. Then $S_1=\{(1,\ldots,1)\}$, and hence

$$\mathscr{T}_1 = \int_{X^{T_n}} f\left(\sum_{j=1}^n p_j g_j(x_j)\right) d\mu^{T_n}(\mathbf{x}),$$

and

$$H_1(t) = \int_{X^{T_n}} f\left(t\sum_{j=1}^n p_j g_j(x_j) + (1-t)\sum_{j=1}^n p_j \int_{X_j} g_j d\mu_j\right) d\mu^{T_n}(\mathbf{x}), \quad t\in[0,1].$$

Now we summarize the essential properties of the function H_k defined in (7).

THEOREM 3. *Assume (H_1–H_6). Then for each $k\in\mathbb{N}_+$*
(a) H_k is convex and increasing.
(b)

$$H_k(0) \geqslant f\left(\sum_{i=1}^n p_i \int_{X_i} g_i d\mu_i\right), \quad H_k(1) = \mathscr{T}_k.$$

(c) H_k is continuous on $[0,1[$.
(d) If f is continuous, then H_k is continuous on $[0,1]$.

It is easy to construct examples which show that H_k is not continuous at 1 in general.

The following refinements of the classical Jensen's inequality are immediate consequences of Theorem 2.

THEOREM 4. *Assume (H_1–H_3). The hypotheses (H_4–H_6) are replaced by*
($\hat{H}_4$) Let $(X,\mathscr{B},\mu)$ be a probability space.
($\hat{H}_5$) Let g be a μ-integrable function on X taking values in an interval $I\subset\mathbb{R}$.
($\hat{H}_6$) Let f be a convex function on I such that $f\circ g$ is μ-integrable on X.
Then
(a)

$$f\left(\int_X g d\mu\right) \leqslant \mathscr{T}_1 \leqslant \ldots \leqslant \mathscr{T}_k \leqslant \mathscr{T}_{k+1} \leqslant \ldots \leqslant \int_X f\circ g d\mu,$$

where

$$\begin{aligned}\mathscr{T}_k &= \mathscr{T}_{k,n}(f;g;\mu;p_i;a_i)\\ &= \sum_{(i_1,\ldots,i_n)\in S_k} u_k(i_1,\ldots,i_n)\left(\sum_{j=1}^{n} a_j(i_j)\,p_j\right)\\ &\quad\times\int_{X^n} f\left(\frac{\sum_{j=1}^{n} a_j(i_j)\,p_j g(x_j)}{\sum_{j=1}^{n} a_j(i_j)\,p_j}\right)d\mu^n(\mathbf{x}), \quad k\in\mathbb{N}_+.\end{aligned}$$

(b) For each $k\in\mathbb{N}_+$ *and all* $t\in[0,1]$

$$f\left(\int_X g\,d\mu\right) = H_k(0)\leqslant H_k(t)\leqslant \mathscr{T}_k,$$

where

$$\begin{aligned}H_k(t) &= H_{k,n}(t;f;g;\mu;p_i;a_i)\\ &= \sum_{(i_1,\ldots,i_n)\in S_k} u_k(i_1,\ldots,i_n)\left(\sum_{j=1}^{n} a_j(i_j)\,p_j\right)\\ &\quad\times\int_{X^n} f\left(t\frac{\sum_{j=1}^{n} a_j(i_j)\,p_j g(x_j)}{\sum_{j=1}^{n} a_j(i_j)\,p_j}+(1-t)\int_X g\,d\mu\right)d\mu^n(\mathbf{x}).\end{aligned}$$

3. Results when recursion is explicitly represented

We first recall the following example from [13].

EXAMPLE 1. Assume (H_1) and (H_3). *Let* $\alpha>0$, $a\geqslant 0$ and $b_j\in\mathbb{R}$ $(1\leqslant j\leqslant n)$ such that the numbers $a+b_j$ are all positive. Define the sequences $(a_j(m))_{m\in\mathbb{N}_+}$ by

$$a_j(m) := \alpha\prod_{i=1}^{m-1}\left(1+\frac{1}{ai+b_j}\right), \quad m\in\mathbb{N}_+, \quad 1\leqslant j\leqslant n. \tag{8}$$

Then these sequences are strictly increasing and

$$\alpha = a_1(1) = \ldots = a_n(1) > 0,$$

thus they satisfy (H_2).

In this case it can be proved that for every $k \in \mathbb{N}_+$

$$u_k(i_1,\ldots,i_n) = \frac{1}{\alpha}\prod_{j=1}^{k-1}\frac{1}{1+a(n+j-1)+\sum_{l=1}^{n} b_l}\prod_{j=1}^{n}\left(\prod_{m=1}^{i_j-1}(am+b_j)\right)$$
$$\times\frac{(k-1)!}{(i_1-1)!\ldots(i_n-1)!}, \quad (i_1,\ldots,i_n)\in S_k. \tag{9}$$

As illustrations, we just consider Theorem 4 in two special cases of the previous example.

The first part of the next result can be considered as the integral version of Theorem 1 (a) in [12].

COROLLARY 1. *Assume (H_1), (H_3), and $(\hat{H}_4$–$\hat{H}_6)$. By choosing $\alpha = a = 1$ and $b_j = 0$ $(1 \leqslant j \leqslant n)$ in (8), we have*

(a)

$$f\left(\int_X g d\mu\right) \leqslant \mathscr{T}_1 \leqslant \ldots \leqslant \mathscr{T}_k \leqslant \mathscr{T}_{k+1} \leqslant \ldots \leqslant \int_X f\circ g d\mu,$$

where

$$\mathscr{T}_k = \mathscr{T}_{k,n}(f;g;\mu;p_i)$$
$$= \frac{1}{\binom{n+k-1}{k-1}}\sum_{(i_1,\ldots,i_n)\in S_k}\left(\sum_{j=1}^{n} i_j p_j\right)\int_{X^n} f\left(\frac{\sum_{j=1}^{n} i_j p_j g(x_j)}{\sum_{j=1}^{n} i_j p_j}\right) d\mu^n(\mathbf{x}), \quad k\in\mathbb{N}_+.$$

(b) For each $k \in \mathbb{N}_+$ and all $t \in [0,1]$

$$f\left(\int_X g d\mu\right) = H_k(0) \leqslant H_k(t) \leqslant \mathscr{T}_k,$$

where

$$H_k(t) = H_{k,n}(t;f;g;\mu;p_i)$$
$$= \frac{1}{\binom{n+k-1}{k-1}}\sum_{(i_1,\ldots,i_n)\in S_k}\left(\sum_{j=1}^{n} i_j p_j\right)\int_{X^n} f\left(t\frac{\sum_{j=1}^{n} i_j p_j g(x_j)}{\sum_{j=1}^{n} i_j p_j} + (1-t)\int_X g d\mu\right) d\mu^n(\mathbf{x}).$$

(c) For each $k \in \mathbb{N}_+$

$$\mathscr{T}_{k,n}\left(f;g;\mu;\frac{1}{n}\right) \leqslant \mathscr{T}_{k,n}(f;g;\mu;p_i),$$

where

$$\mathscr{T}_{k,n}\left(f;g;\mu;\frac{1}{n}\right)=\frac{1}{\binom{n+k-2}{k-1}}\sum_{(i_1,\ldots,i_n)\in S_k}\int_{X^n}f\left(\frac{1}{n+k-1}\sum_{j=1}^{n}i_jg\left(x_j\right)\right)d\mu^n\left(\mathbf{x}\right)$$

(d) If $p_i>0\ \ (1\leqslant i\leqslant n)$*, then for each* $k\in\mathbb{N}_+$ *and for each* $l\in\mathbb{N}_+$

$$f\left(\int_X gd\mu\right)\leqslant\mathscr{T}_k\leqslant\mathscr{A}_l\leqslant\int_X f\circ gd\mu,$$

where

$$\begin{aligned}\mathscr{A}_l &= \mathscr{A}_{l,n}\left(f;g;\mu;p_i\right)\\ &:=\frac{1}{\binom{n+l-1}{l-1}}\sum_{\substack{i_1+\ldots+i_n=l\\ i_j\in\mathbb{N};\quad 1\leqslant j\leqslant n}}\left(\sum_{j=1}^{l}i_jp_j\right)\int_{X^n}f\left(\frac{\sum_{j=1}^{l}i_jp_jg\left(x_j\right)}{\sum_{j=1}^{l}i_jp_j}\right)d\mu^n\left(\mathbf{x}\right).\end{aligned}$$

(e) Suppose $p_i>0\ \ (1\leqslant i\leqslant n)$*. Then*

$$\lim_{k\to\infty}\mathscr{T}_k=\lim_{l\to\infty}\mathscr{A}_l=n!\int_{X^n}\left(\int_{E_n}h\left(t_1,\ldots,t_{n-1},x_1,\ldots,x_n\right)d\lambda^{n-1}\left(\mathbf{t}\right)\right)d\mu^n\left(\mathbf{x}\right),\quad(10)$$

where

$$E_n:=\left\{\left(t_1,\ldots,t_{n-1}\right)\in\mathbb{R}^{n-1}\mid\sum_{j=1}^{n-1}t_j\leqslant 1,\quad t_j\geqslant 0,\ j=1,\ldots,n-1\right\},$$

the function h *defined on* $E_n\times X^n$ *by*

$$h\left(t_1,\ldots,t_{n-1},x_1,\ldots,x_n\right):=\left(\sum_{j=1}^{n}t_jp_j\right)f\left(\frac{1}{\sum_{j=1}^{n}t_jp_j}\left(\sum_{j=1}^{n}t_jp_jg\left(x_j\right)\right)\right)$$

with the notation $t_n:=\ 1-\sum_{j=1}^{n-1}t_j$.

Proof. (a) and (b) come from Theorem 4.
(c) Theorem 1 (b) in [12] can be applied.
(d) According to Proposition 2 in [14], the sequence $\left(\mathscr{A}_l\right)_{l\in\mathbb{N}_+}$ is decreasing and

$$f\left(\int_X gd\mu\right)\leqslant\mathscr{A}_l\leqslant\int_X f\circ gd\mu,\quad l\in\mathbb{N}_+.$$

Define for all $(x_1,\dots,x_n)\in X^n$ the expressions

$$G_{k,n}(x_1,\dots,x_n):=\frac{1}{\binom{n+k-1}{k-1}}\sum_{(i_1,\dots,i_n)\in S_k}\left(\sum_{j=1}^{n}i_jp_j\right)f\left(\frac{1}{\sum_{j=1}^{n}i_jp_j}\sum_{j=1}^{n}i_jp_jg(x_j)\right),\quad k\in\mathbb{N}_+,$$

and

$$B_{l,n}(x_1,\dots,x_n):=\frac{1}{\binom{n+l-1}{l-1}}\sum_{\substack{i_1+\dots+i_n=l\\ i_j\in\mathbb{N};\quad 1\leqslant j\leqslant n}}\left(\sum_{j=1}^{n}i_jp_j\right)f\left(\frac{1}{\sum_{j=1}^{n}i_jp_j}\sum_{j=1}^{n}i_jp_jg(x_j)\right),\quad l\in\mathbb{N}_+.$$

Theorem 1 (a) in [12] shows that the sequence

$$\left(G_{k,n}(x_1,\dots,x_n)\right)_{k\in\mathbb{N}_+}\tag{11}$$

is increasing for all $(x_1,\dots,x_n)\in X^n$. By Example 3 in [10], the sequence

$$\left(B_{l,n}(x_1,\dots,x_n)\right)_{l\in\mathbb{N}_+}\tag{12}$$

is decreasing for all $(x_1,\dots,x_n)\in X^n$. It follows from Theorem 3 in [12] that

$$\begin{aligned}\lim_{k\to\infty}G_{k,n}(x_1,\dots,x_n)&=\lim_{l\to\infty}B_{l,n}(x_1,\dots,x_n)\\&=\int_{E_n}h(t_1,\dots,t_{n-1},x_1,\dots,x_n)\,d\lambda^{n-1}(\mathbf{t}),\quad (x_1,\dots,x_n)\in X^n.\end{aligned}\tag{13}$$

Putting all this together gives that for each $k\in\mathbb{N}_+$ and for each $l\in\mathbb{N}_+$

$$G_{k,n}(x_1,\dots,x_n)\leqslant B_{l,n}(x_1,\dots,x_n),\quad (x_1,\dots,x_n)\in X^n.$$

By integrating both sides over X^n, we have $\mathscr{T}_k\leqslant\mathscr{A}_l$ $(k\in\mathbb{N}_+,\ l\in\mathbb{N}_+)$.

(e) Assuming that the function h is $\lambda^{n-1}\times\mu^n$-integrable over $E_n\times X^n$ for the present, the monotonicity properties of the sequences (11) and (12), the limit formula (13), and the Fubini's theorem imply (10).

The measurability of h is obvious. To justify the supposed integrability condition, choose a fixed interior point a of I. Since f is convex

$$f(t)\geqslant f(a)+f'_+(a)(t-a),\quad t\in I,$$

where $f'_+(a)$ means the right-hand derivative of f at a. By using this and the discrete Jensen's inequality, we have

$$\begin{aligned}&\left(\sum_{j=1}^{n}t_jp_j\right)f(a)+f'_+(a)\left(\sum_{j=1}^{n}t_jp_jg(x_j)-a\left(\sum_{j=1}^{n}t_jp_j\right)\right)\\&\leqslant h(t_1,\dots,t_{n-1},x_1,\dots,x_n)\leqslant\sum_{j=1}^{n}t_jp_jf(g(x_j))\end{aligned}\tag{14}$$

for all $(t_1,\ldots,t_{n-1},x_1,\ldots,x_n)\in E_n\times X^n$. It is enough to prove that the functions on the left hand side and the right hand side of the previous inequalities are $\lambda^{n-1}\times\mu^n$-integrable over $E_n\times X^n$. We consider only the function on the right hand side of (14), the other case can be handled similarly. In proving this, we may suppose that f is nonnegative on I, and therefore by the Fubini's theorem, and then by Lemma 2.1 (a) in [8]

$$\begin{aligned}
&\int\limits_{E_n\times X^n}\left(\sum_{j=1}^n t_j p_j f(g(x_j))\right)d\lambda^{n-1}\times\mu^n(t_1,\ldots,t_{n-1},x_1,\ldots,x_n)\\
&=\int\limits_{E_n}\left(\int\limits_{X^n}\sum_{j=1}^n t_j p_j f(g(x_j))\,d\mu^n(\mathbf{x})\right)d\lambda^{n-1}(\mathbf{t})\\
&=\left(\int\limits_X f\circ g\,d\mu\right)\left(\int\limits_{E_n}\left(\sum_{j=1}^n t_j p_j\right)d\lambda^{n-1}(\mathbf{t})\right)<\infty.
\end{aligned}$$

The proof is complete. □

REMARK 2. We stress that the sequences $(\mathscr{T}_k)_{k\in\mathbb{N}_+}$ and $(\mathscr{A}_l)_{l\in\mathbb{N}_+}$, compared in part (d) of the previous result, are generated from such refinements of the discrete Jensen's inequality which have been obtained by essentially different methods.

Now, the integral variant of Theorem 1 (a) is obtained.

COROLLARY 2. *Assume (H_1), (H_3), and $(\hat{H}_4$–$\hat{H}_6)$. By choosing $\alpha=1$, $a=0$ and $b_j=\frac{1}{\lambda_j-1}$ $(1\leqslant j\leqslant n)$, where $\lambda_j>1$ $(1\leqslant j\leqslant n)$ in (8), we have with the notation $d(\lambda):=\sum_{j=1}^n\frac{1}{\lambda_j-1}$*

(a)

$$f\left(\int\limits_X g\,d\mu\right)\leqslant\mathscr{T}_1\leqslant\ldots\leqslant\mathscr{T}_k\leqslant\mathscr{T}_{k+1}\leqslant\ldots\leqslant\int\limits_X f\circ g\,d\mu,$$

where for every $k\in\mathbb{N}_+$

$$\begin{aligned}
\mathscr{T}_k&=\mathscr{T}_{k,n}(f;g;\mu;p_i)\\
&=\frac{1}{(d(\lambda)+1)^{k-1}}\sum_{(i_1,\ldots,i_n)\in S_k}\frac{(k-1)!}{(i_1-1)!\ldots(i_n-1)!}\\
&\quad\times\prod_{j=1}^n\frac{1}{(\lambda_j-1)^{i_j-1}}\left(\sum_{j=1}^n\lambda_j^{i_j-1}p_j\right)\int\limits_{X^n}f\left(\frac{\sum_{j=1}^n\lambda_j^{i_j-1}p_j g(x_j)}{\sum_{j=1}^n\lambda_j^{i_j-1}p_j}\right)d\mu^n(\mathbf{x}).
\end{aligned}$$

(b) For each $k \in \mathbb{N}_+$ and all $t \in [0,1]$

$$f\left(\int_X g d\mu\right) = H_k(0) \leqslant H_k(t) \leqslant \mathscr{T}_k,$$

where

$$\begin{aligned} H_k(t) &= H_{k,n}(t;f;g;\mu;p_i) \\ &= \frac{1}{(d(\lambda)+1)^{k-1}} \sum_{(i_1,\ldots,i_n)\in S_k} \frac{(k-1)!}{(i_1-1)!\ldots(i_n-1)!} \prod_{j=1}^{n} \frac{1}{(\lambda_j-1)^{i_j-1}} \\ &\quad \times \left(\sum_{j=1}^{n} \lambda_j^{i_j-1} p_j\right) \int_{X^n} f\left(\frac{\sum_{j=1}^{n} \lambda_j^{i_j-1} p_j g(x_j)}{\sum_{j=1}^{n} \lambda_j^{i_j-1} p_j} + (1-t)\int_X g d\mu\right) d\mu^n(\mathbf{x}). \end{aligned}$$

(c)

$$\lim_{k\to\infty} \mathscr{T}_k = \int_X f \circ g d\mu.$$

Proof. We have only to apply Theorem 4 to get (a) and (b).
(c) Let for all $(x_1,\ldots,x_n) \in X^n$

$$\begin{aligned} D_{k,n}(\lambda;x_1,\ldots,x_n) &= \frac{1}{(d(\lambda)+1)^{k-1}} \sum_{(i_1,\ldots,i_n)\in S_k} \frac{(k-1)!}{(i_1-1)!\ldots(i_n-1)!} \\ &\quad \times \prod_{j=1}^{n} \frac{1}{(\lambda_j-1)^{i_j-1}} \left(\sum_{j=1}^{n} \lambda_j^{i_j-1} p_j\right) f\left(\frac{\sum_{j=1}^{n} \lambda_j^{i_j-1} p_j g(x_j)}{\sum_{j=1}^{n} \lambda_j^{i_j-1} p_j}\right). \end{aligned}$$

By Theorem 1 (a) in [11], the sequence

$$\left(D_{k,n}(\lambda;x_1,\ldots,x_n)\right)_{k\in\mathbb{N}_+}$$

is increasing, and by (b) of the same theorem

$$\lim_{k\to\infty} D_{k,n}(\lambda;x_1,\ldots,x_n) = \sum_{j=1}^{n} p_j f(g(x_j)), \quad (x_1,\ldots,x_n) \in X^n.$$

It follows from these facts that

$$\begin{aligned} \lim_{k\to\infty} \mathscr{T}_k &= \lim_{k\to\infty} \int_{X^n} D_{k,n}(\lambda;x_1,\ldots,x_n)\, d\mu^n(\mathbf{x}) \\ &= \sum_{j=1}^{n} p_j \int_{X^n} f(g(x_j))\, \mu^n(\mathbf{x}) = \int_X f \circ g d\mu. \end{aligned}$$

The proof is now complete. □

4. Means generated by the expressions in the new refinements

In this section we introduce some new integral means (generalized quasi-arithmetic means) and study their properties.

DEFINITION 1. Assume (H_1–H_3) and
(H_4) Let $(X_i, \mathscr{B}_i, \mu_i)$ $(i = 1, \ldots, n)$ be probability spaces.
Assume further
(H_7) For each $i = 1, \ldots, n$, let g_i be a measurable function on X_i taking values in an interval $I \subset \mathbb{R}$.
(H_8) Let φ, $\psi : I \to \mathbb{R}$ be continuous and strictly monotone functions.
(a) For each $k \in \mathbb{N}_+$, we define integral means with respect to (5) by

$$\begin{aligned} & M_{\psi,\varphi}(k) \\ = {} & M_{\psi,\varphi}(g_i; \mu_i; p_i; a_i; k) \\ := {} & \psi^{-1}\Bigg(\sum_{(i_1,\ldots,i_n)\in S_k} u_k(i_1, \ldots, i_n) \\ & \times \left(\sum_{j=1}^{n} a_j(i_j) p_j \right) \int_{X^{T_n}} (\psi \circ \varphi^{-1}) \left(\frac{\sum_{j=1}^{n} a_j(i_j) p_j \varphi(g_j(x_j))}{\sum_{j=1}^{n} a_j(i_j) p_j} \right) d\mu^{T_n}(\mathbf{x}) \Bigg), \end{aligned} \tag{15}$$

if the integrals exist and finite.

(b) For each $k \in \mathbb{N}_+$ and for all $t \in [0,1]$, integral means can be defined with respect to (7) by

$$\begin{aligned} & M_{\psi,\varphi}(t; k) \\ = {} & M_{\psi,\varphi}(t; g_i; \mu_i; p_i; a_i; k) \\ := {} & \psi^{-1}\Bigg(\sum_{(i_1,\ldots,i_n)\in S_k} u_k(i_1, \ldots, i_n) \left(\sum_{j=1}^{n} a_j(i_j) p_j \right) \int_{X^{T_n}} (\psi \circ \varphi^{-1}) \\ & \times \left(t \frac{\sum_{j=1}^{n} a_j(i_j) p_j \varphi(g_j(x_j))}{\sum_{j=1}^{n} a_j(i_j) p_j} + (1-t) \frac{\sum_{j=1}^{n} a_j(i_j) p_j \int_{X_j} \varphi \circ g_j d\mu_j}{\sum_{j=1}^{n} a_j(i_j) p_j} \right) d\mu^{T_n}(\mathbf{x}) \Bigg), \end{aligned} \tag{16}$$

if the integrals exist and finite.

It has been shown in [13] that for any $j = 1, \ldots, n$

$$\sum_{(i_1,\ldots,i_n)\in S_k} u_k(i_1, \ldots, i_n) a_j(i_j) = 1, \tag{17}$$

and therefore by (H_3)

$$\sum_{(i_1,\ldots,i_n)\in S_k} u_k(i_1,\ldots,i_n)\left(\sum_{j=1}^{n} a_j(i_j)\,p_j\right)=1,\quad k\in\mathbb{N}_+. \tag{18}$$

This implies that

$$M_{\psi,\varphi}(k)\in I \text{ and } M_{\psi,\varphi}(t;k)\in I,\quad k\in\mathbb{N}_+,\quad t\in[0,1],$$

that is they really define means.

By Remark 1, if $\varphi\circ g_i$ and $\psi\circ g_i$ are μ_i-integrable on X_i $(i=1,\ldots,n)$, and $\psi\circ\varphi^{-1}$ is either convex or concave, then the integrals in (15) and (16) exist and finite.

The following integral mean is also needed: if (H_3–H_4) and (H_7) are satisfied, and $\chi:I\to\mathbb{R}$ is a continuous and strictly monotone function, then define

$$M_\chi=M_\chi(g_i;\mu_i;p_i):=\chi^{-1}\left(\sum_{i=1}^{n} p_i\int_{X_i}\chi\circ g_i d\mu_i\right), \tag{19}$$

if the integrals exist and finite.

Let q, $g:[a,b]\to\mathbb{R}$ be positive and Lebesgue-integrable functions, and let $\chi:]0,\infty[\to\mathbb{R}$ be a continuous and strictly monotone function. The so called generalized weighted quasi-arithmetic mean of g with respect to the weight function q

$$M_\chi=M_\chi(g;q):=\chi^{-1}\left(\frac{\int_a^b q(x)\,\chi(g(x))\,dx}{\int_a^b q(x)\,dx}\right) \tag{20}$$

is a special case of (19), and it contains different remarkable means (for example, weighted arithmetic, harmonic and geometric means). The properties of means (20) are studied intensively, we just mention two papers dealing with integral means: Haluška and Hutnik [6] and Sun, Long and Chu [19].

We continue this section with a discussion on the monotonicity of the introduced means.

THEOREM 5. *Assume (H_1–H_4), (H_7–H_8), and assume that $\varphi\circ g_i$ and $\psi\circ g_i$ are μ_i-integrable on X_i $(i=1,\ldots,n)$. Then*

(a)

$$M_\varphi\leqslant M_{\psi,\varphi}(1)\leqslant\ldots\leqslant M_{\psi,\varphi}(k)\leqslant\ldots\leqslant M_\psi,\quad k\in\mathbb{N}_+, \tag{21}$$

and

$$M_\varphi\leqslant M_{\psi,\varphi}(0;k)\leqslant M_{\psi,\varphi}(t;k)\leqslant M_{\psi,\varphi}(k),\quad k\in\mathbb{N}_+,\quad t\in[0,1],$$

if either $\psi\circ\varphi^{-1}$ is convex and ψ is increasing or $\psi\circ\varphi^{-1}$ is concave and ψ is decreasing.

(b)

$$M_\varphi \geqslant M_{\psi,\varphi}(1) \geqslant \ldots \geqslant M_{\psi,\varphi}(k) \geqslant \ldots \geqslant M_\psi, \quad k \in \mathbb{N}_+, \tag{22}$$

and

$$M_\varphi \geqslant M_{\psi,\varphi}(0;k) \geqslant M_{\psi,\varphi}(t;k) \geqslant M_{\psi,\varphi}(k), \quad k \in \mathbb{N}_+, \quad t \in [0,1],$$

if either $\psi \circ \varphi^{-1}$ *is convex and* ψ *is decreasing or* $\psi \circ \varphi^{-1}$ *is concave and* ψ *is increasing.*

Proof. (a) and (b) can be obtained by applications of Theorem 2 to the functions $\psi \circ \varphi^{-1}$ and $\varphi \circ g_i$ $(i = 1, \ldots, n)$ ($\varphi(I)$ is an interval), if $\psi \circ \varphi^{-1}$ is convex, and to the functions $-\psi \circ \varphi^{-1}$ and $\varphi \circ g_i$ $(i = 1, \ldots, n)$, if $\psi \circ \varphi^{-1}$ is concave, and then upon taking ψ^{-1}. $\square$

Recently, in [17] by Khuram Ali Khan and Pečarić the inequalities (21) and (22) have been proved for the mean $M_{\psi,\varphi}(1)$. It can be seen that our approach allows us to essentially generalize and extend some of the results from [17].

5. Connections to Hermite-Hadamard inequality

Different refinements of the left hand side of Hermite-Hadamard inequality can be got from Theorem 4.

THEOREM 6. *Assume* (H_1–H_3), *and let* f *be a convex function on* $[a,b]$. *Then*
(a)

$$f\left(\frac{a+b}{2}\right) \leqslant \hat{\mathscr{T}}_1 \leqslant \ldots \leqslant \hat{\mathscr{T}}_k \leqslant \hat{\mathscr{T}}_{k+1} \leqslant \ldots \leqslant \frac{1}{b-a}\int_a^b f,$$

where

$$\begin{aligned}\hat{\mathscr{T}}_k &= \hat{\mathscr{T}}_{k,n}(f;p_i;a_i)\\ &= \frac{1}{(b-a)^n}\sum_{(i_1,\ldots,i_n)\in S_k} u_k(i_1,\ldots,i_n)\left(\sum_{j=1}^n a_j(i_j)\,p_j\right)\\ &\quad\times \int_{[a,b]^n} f\left(\frac{\sum_{j=1}^n a_j(i_j)\,p_j x_j}{\sum_{j=1}^n a_j(i_j)\,p_j}\right) d\lambda^n(\mathbf{x}), \quad k \in \mathbb{N}_+.\end{aligned}$$

(b) For each $k \in \mathbb{N}_+$ *and all* $t \in [0,1]$

$$f\left(\frac{a+b}{2}\right) = \hat{H}_k(0) \leqslant \hat{H}_k(t) \leqslant \hat{H}_k(1) = \hat{\mathscr{T}}_k,$$

where

$$\begin{aligned}\hat{H}_k(t) &= \hat{H}_{k,n}(t;f;p_i;a_i)\\ &= \frac{1}{(b-a)^n}\sum_{(i_1,\ldots,i_n)\in S_k} u_k(i_1,\ldots,i_n)\left(\sum_{j=1}^{n} a_j(i_j)\,p_j\right)\\ &\quad\times\int_{[a,b]^n} f\left(t\frac{\sum_{j=1}^{n} a_j(i_j)\,p_j x_j}{\sum_{j=1}^{n} a_j(i_j)\,p_j}+(1-t)\frac{a+b}{2}\right)d\lambda^n(\mathbf{x}).\end{aligned}$$

(c) $\hat{H}_k$ is convex and increasing for each $k\in\mathbb{N}_+$. If f is continuous, then $\hat{H}_k$ is also continuous.

Proof. We can apply Theorem 4 and Theorem 3, when the probability space is $\left([a,b],\mathscr{B},\frac{1}{b-a}\lambda\right)$ ($\mathscr{B}$ now means the σ-algebra of Borel sets of $[a,b]$), $I:=[a,b]$, g is the identity function on $[a,b]$, and f is a convex function on $[a,b]$. $\square$

The investigation of functions like $\hat{H}_k$, seems to be due to Dragomir, who has introduced and studied among others the function $\hat{H}_{1,1}$ in [4]. Many papers deal with similar functions, for example see Abdallah El Farissi [1], Dragomir and Agarwal [5], Yang and Wang [20] and Yang and Tseng [21]. Our result gives a new approach in treating the problem.

6. Proofs of the main inequalities

We need the following well known result:

LEMMA 1. (see [2], 16.1 Lemma) *Let $(\Omega,\mathscr{A},\mu)$ be a measure space. Let E be a metric space, and $f:E\times\Omega\to\mathbb{R}$ a function with the properties*
(i) $\omega\to f(x,\omega)$ is μ-integrable for each $x\in E$,
(ii) $x\to f(x,\omega)$ is continuous at $x_0\in E$ for every $\omega\in\Omega$,
(iii) there is a nonnegative μ-integrable function h on Ω such that

$$|f(x,\omega)|\leqslant h(\omega),\quad (x,\omega)\in E\times\Omega.$$

Then the function φ defined on E by

$$\varphi(x)=\int_{\Omega} f(x,\omega)\,d\mu(\omega)$$

is continuous at x_0.

Proof of Theorem 3. Fix $k\in\mathbb{N}_+$.

(a) Since convexity is invariant under affine maps, the integral is monotonic, and the sum of convex functions is also convex, H_k is convex on $[0,1]$.

By applying the classical Jensen's inequality, we get for all $t \in [0,1]$ that

$$\begin{aligned}
H_k(t) &\geqslant \sum_{(i_1,\ldots,i_n)\in S_k} u_k(i_1,\ldots,i_n)\left(\sum_{j=1}^{n} a_j(i_j)\,p_j\right) \\
&\quad \times f\left(\int_{X^{T_n}}\left(t\frac{\sum_{j=1}^{n} a_j(i_j)\,p_j g_j(x_j)}{\sum_{j=1}^{n} a_j(i_j)\,p_j} + (1-t)\frac{\sum_{j=1}^{n} a_j(i_j)\,p_j \int_{X_j} g_j d\mu_j}{\sum_{j=1}^{n} a_j(i_j)\,p_j}\right) d\mu^{T_n}(\mathbf{x})\right) \\
&= \sum_{(i_1,\ldots,i_n)\in S_k} u_k(i_1,\ldots,i_n)\left(\sum_{j=1}^{n} a_j(i_j)\,p_j\right) f\left(\frac{\sum_{j=1}^{n} a_j(i_j)\,p_j \int_{X_j} g_j d\mu_j}{\sum_{j=1}^{n} a_j(i_j)\,p_j}\right) \\
&= H_k(0). \qquad (23)
\end{aligned}$$

Suppose $0 \leqslant t_1 < t_2 \leqslant 1$. The convexity of H_k, and $H_k(t) \geqslant H_k(0)$ $(t \in [0,1])$ mean that

$$\frac{H_k(t_2) - H_k(t_1)}{t_2 - t_1} \geqslant \frac{H_k(t_2) - H_k(0)}{t_2} \geqslant 0,$$

and thus

$$H_k(t_2) \geqslant H_k(t_1).$$

(b) When (18) is combined with (23) and with the discrete Jensen's inequality, it follows that

$$\begin{aligned}
H_k(0) &\geqslant f\left(\sum_{(i_1,\ldots,i_n)\in S_k} u_k(i_1,\ldots,i_n)\left(\sum_{j=1}^{n} a_j(i_j)\,p_j \int_{X_j} g_j d\mu_j\right)\right) \\
&= f\left(\sum_{j=1}^{n} p_j \int_{X_j} g_j d\mu_j \left(\sum_{(i_1,\ldots,i_n)\in S_k} u_k(i_1,\ldots,i_n)\,a_j(i_j)\right)\right) = f\left(\sum_{j=1}^{n} p_j \int_{X_j} g_j d\mu_j\right).
\end{aligned}$$

$H_k(1) = \mathscr{T}_k$ is obvious.

(c) It follows from (a).

(d) It remains only to show that H_k is continuous at 1. We check the conditions of Lemma 1.

(i) See Remark 1.

(ii) Since f is continuous, the function

$$t \to f\left(t\frac{\sum_{j=1}^{n} a_j(i_j)\,p_j g_j(x_j)}{\sum_{j=1}^{n} a_j(i_j)\,p_j} + (1-t)\frac{\sum_{j=1}^{n} a_j(i_j)\,p_j \int_{X_j} g_j d\mu_j}{\sum_{j=1}^{n} a_j(i_j)\,p_j}\right)$$

is continuous at 1 for every $\mathbf{x} \in X^{T_n}$.

(iii) By applying the discrete Jensen's inequality, we have

$$\begin{aligned}
&f\left(t\frac{\sum_{j=1}^{n} a_j(i_j)\,p_j g_j(x_j)}{\sum_{j=1}^{n} a_j(i_j)\,p_j} + (1-t)\frac{\sum_{j=1}^{n} a_j(i_j)\,p_j \int_{X_j} g_j d\mu_j}{\sum_{j=1}^{n} a_j(i_j)\,p_j}\right)\\
&\leqslant t f\left(\frac{\sum_{j=1}^{n} a_j(i_j)\,p_j g_j(x_j)}{\sum_{j=1}^{n} a_j(i_j)\,p_j}\right) + (1-t) f\left(\frac{\sum_{j=1}^{n} a_j(i_j)\,p_j \int_{X_j} g_j d\mu_j}{\sum_{j=1}^{n} a_j(i_j)\,p_j}\right)\\
&\leqslant \max\left(f\left(\frac{\sum_{j=1}^{n} a_j(i_j)\,p_j g_j(x_j)}{\sum_{j=1}^{n} a_j(i_j)\,p_j}\right), f\left(\frac{\sum_{j=1}^{n} a_j(i_j)\,p_j \int_{X_j} g_j d\mu_j}{\sum_{j=1}^{n} a_j(i_j)\,p_j}\right)\right)
\end{aligned}$$

for all $t \in [0,1]$ and $\mathbf{x} \in X^{T_n}$.

Choose a fixed interior point a of I. Since f is convex

$$f(t) \geqslant f(a) + f'_+(a)(z-a), \quad z \in I,$$

where $f'_+(a)$ means the right-hand derivative of f at a. It follows from this that

$$\begin{aligned}
&f\left(t\frac{\sum_{j=1}^{n} a_j(i_j)\,p_j g_j(x_j)}{\sum_{j=1}^{n} a_j(i_j)\,p_j} + (1-t)\frac{\sum_{j=1}^{n} a_j(i_j)\,p_j \int_{X_j} g_j d\mu_j}{\sum_{j=1}^{n} a_j(i_j)\,p_j}\right)\\
&\geqslant f(a) + f'_+(a)\left(t\frac{\sum_{j=1}^{n} a_j(i_j)\,p_j g_j(x_j)}{\sum_{j=1}^{n} a_j(i_j)\,p_j} + (1-t)\frac{\sum_{j=1}^{n} a_j(i_j)\,p_j \int_{X_j} g_j d\mu_j}{\sum_{j=1}^{n} a_j(i_j)\,p_j} - a\right)
\end{aligned}$$

$$\geqslant \min\left(f(a)+f'_+(a)\left(\frac{\sum_{j=1}^{n}a_j(i_j)p_jg_j(x_j)}{\sum_{j=1}^{n}a_j(i_j)p_j}-a\right)\right.$$
$$\left.\times f(a)+f'_+(a)\left(\frac{\sum_{j=1}^{n}a_j(i_j)p_j\int_{X_j}g_jd\mu_j}{\sum_{j=1}^{n}a_j(i_j)p_j}-a\right)\right)$$

for all $t\in[0,1]$ and $\mathbf{x}\in X^{T_n}$.

The result now follows from Lemma 1.

The proof is complete. □

Proof of Theorem 2. (a) Since $S_1=\{(1,\ldots,1)\}$, (3), (2) and (H_3) give that

$$\mathscr{T}_1=\int_{X^{T_n}}f\left(\sum_{j=1}^{n}p_jg_j(x_j)\right)d\mu^{T_n}(\mathbf{x}).$$

From the classical Jensen's inequality we therefore have

$$\mathscr{T}_1\geqslant f\left(\int_{X^{T_n}}\sum_{j=1}^{n}p_jg_j(x_j)\,d\mu^{T_n}(\mathbf{x})\right)=f\left(\sum_{i=1}^{n}p_i\int_{X_i}g_id\mu_i\right).$$

According to Theorem 1

$$\begin{aligned}&T_{k,n}(g(x_1),\ldots,g(x_n);p_1,\ldots,p_n;a_1,\ldots,a_n)\\ &\leqslant T_{k+1,n}(g(x_1),\ldots,g(x_n);p_1,\ldots,p_n;a_1,\ldots,a_n),\quad k\in\mathbb{N}_+\end{aligned}$$

for all fixed $(x_1,\ldots,x_n)\in X^{T_l}$, and hence

$$\mathscr{T}_k\leqslant\mathscr{T}_{k+1},\quad k\in\mathbb{N}_+.$$

Finally, it follows from the discrete Jensen's inequality that

$$\begin{aligned}\mathscr{T}_k&\leqslant\sum_{(i_1,\ldots,i_n)\in S_k}u_k(i_1,\ldots,i_n)\int_{X^{T_n}}\sum_{j=1}^{n}a_j(i_j)p_jf(g_j(x_j))\,d\mu^{T_n}(\mathbf{x})\\ &=\sum_{(i_1,\ldots,i_n)\in S_k}u_k(i_1,\ldots,i_n)\sum_{j=1}^{n}a_j(i_j)p_j\int_{X_j}f\circ g_jd\mu_j\\ &=\sum_{j=1}^{n}\left(\sum_{(i_1,\ldots,i_n)\in S_k}u_k(i_1,\ldots,i_n)a_j(i_j)\right)p_j\int_{X_j}f\circ g_jd\mu_j.\end{aligned}\tag{24}$$

This and (17) imply that

$$\mathscr{T}_k \leqslant \sum_{j=1}^{n} p_j \int_{X_j} f \circ g_j d\mu_j, \quad k \in \mathbb{N}_+.$$

(b) Apply Theorem 3 (b).
The proof is complete. □

Acknowledgements. The research of the 1st author has been supported by Hungarian National Foundations for Scientific Research Grant No. K120186. The research of the 2nd author has been fully supported by Croatian Science Foundation under the project 5435.

REFERENCES

[1] ABDALLAH EL FARISSI, *Simple proof and refinement of Hermite–Hadamard inequality*, J. Math. Inequal. **4** (2010), no. 3, 365–369.
[2] H. BAUER, *Measure and Integration Theory*, Walter de Gruyter, Berlin, New York, 2001.
[3] I. BRNETIĆ, C. E. M. PEARCE, J. PEČARIĆ, *Refinements of Jensen's inequality*, Tamkang J. Math. **31** (2000), no. 1, 63–69.
[4] S. S. DRAGOMIR, *Two mappings in connection to Hadamard's inequalities*, J. Math. Anal. Appl. **167** (1992), no. 1, 49–56.
[5] S. S. DRAGOMIR, P. AGARWAL, *Two new mappings associated with Hadamard's inequalities for convex functions*, Appl. Math. Lett. **11** (1998), no. 3, 33–38.
[6] J. HALUŠKA, O. HUTNIK, *Some inequalities involving integral means*, Tatra Mt. Math. Publ. **35** (2007), no. 1, 131–146.
[7] G. H. HARDY, J. E. LITTLEWOOD, G. PÓLYA, *Inequalities*, Cambridge University Press, Cambridge, 1978.
[8] L. HORVÁTH, *Inequalities corresponding to the classical Jensen's inequality*, J. Math. Inequal. **3** (2009), no. 2, 189–200.
[9] L. HORVÁTH, *A refinement of the integral form of Jensen's inequality*, J. Inequal. Appl. (2012) 2012:178, 19 pp.
[10] L. HORVÁTH, J. PEČARIĆ, *A refinement of the discrete Jensen's inequality*, Math. Inequal. Appl. **14** (2011), no. 4, 777–791.
[11] L. HORVÁTH, *A new refinement of the discrete Jensen's inequality depending on parameters*, J. Inequal. Appl. (2013) 2013:551, 16 pp.
[12] L. HORVÁTH, *Weighted form of a recent refinement of the discrete Jensen's inequality*, Math. Inequal. Appl. **17** (2014), no. 3, 947–961.
[13] L. HORVÁTH, *Infinite refinements of the discrete Jensen's inequality defined by recursion*, J. Math. Inequal. **9** (2015) no. 4, 1115–1132.
[14] L. HORVÁTH, J. PEČARIĆ, *Refinements of the classical Jensen's inequality coming from refinements of the discrete Jensen's inequality*, Adv. Inequal. Appl., Vol. **2015** (2015), Art ID 8, 17 pp.
[15] L. HORVÁTH, KHURAM ALI KHAN, J. PEČARIĆ, *Combinatorial Improvements of Jensen's Inequality*, Monographs in Inequalities **8**, Element, Zagreb, 2014.
[16] J. L. W. V. JENSEN, *Sur les fonctions convexes et les inegalités entre les valeurs moyennes*, Acta Math. **30** (1906), 175–193.
[17] KHURAM ALI KHAN, J. PEČARIĆ, *Mixed symmetric means related to the classical Jensen's inequality*, J. Math. Inequal. **7** (2013) no. 1, 43–62.
[18] J. ROOIN, *A refinement of Jensen's inequality*, JIPAM. J. Inequal. Pure Appl. Math. **6** (2), Article 38 (2005).
[19] H. SUN, B. LONG, Y. CHU, *On the generalized weighted quasi-arithmetic integral mean*, Int. Journal of Math. Analysis **7** (2013) no. 41, 2039–2048.

[20] G. S. YANG, C. S. WANG, *Some refinements of Hadamard's inequality*, Tamkang J. Math. **28** (1997), 87–92.

[21] G. S. YANG, K. L. TSENG, *On certain integral inequalities related to Hermite-Hadamard inequalities*, J. Math. Anal. Appl. **239** (1999), no. 1, 180–187.

(Received February 6, 2016)

László Horváth
Department of Mathematics, University of Pannonia
Egyetem u. 10, 8200 Veszprém, Hungary
e-mail: lhorvath@almos.uni-pannon.hu

Josip Pečarić
Faculty of Textile Technology, University of Zagreb
Pierottijeva 6, 10000 Zagreb, Croatia
e-mail: pecaric@mahazu.hazu.hr

Mathematical
Inequalities
& Applications
Volume 19, Number 4 (2016), 1247–1256 doi:10.7153/mia-19-91

GENERALIZATION OF POPOVICIU TYPE INEQUALITIES VIA GREEN'S FUNCTION AND FINK'S IDENTITY

RAVI P. AGARWAL, SAAD IHSAN BUTT, JOSIP PEČARIĆ AND ANA VUKELIĆ

(*Communicated by S. Varošanec*)

Abstract. We obtain some useful identities via Green's function and Fink's identity, and apply them to generalize the known Popoviciu's inequality for convex functions to higher order convex functions. Then we investigate the bounds for the identities related to the generalization of the Popoviciu inequality by using inequalities for the Čebyšev functional. Some results relating to the Grüss and Ostrowski type inequalities are also obtained. Finally, we construct new families of exponentially convex functions and Cauchy-type means by exploring at linear functionals associated with the obtained inequalities.

1. Introduction

Many areas in modern analysis directly or indirectly involve the applications of convex functions; further, convex functions are closely related to the theory of inequalities and many important inequalities are consequences of the applications of convex functions (see [10]). Divided differences are found to be very helpful when we are dealing with functions having different degrees of smoothness. The following definition of divided difference is given in [10, p. 14].

DEFINITION 1. The nth-order divided difference of a function $f:[a,b]\to\mathbb{R}$ at mutually distinct points $x_0,\ldots,x_n\in[a,b]$ is defined recursively by

$$\begin{aligned}[x_i;f] &= f(x_i), \quad i=0,\ldots,n,\\ [x_0,\ldots,x_n;f] &= \frac{[x_1,\ldots,x_n;f]-[x_0,\ldots,x_{n-1};f]}{x_n-x_0}. \end{aligned} \tag{1}$$

It is easy to see that (1) is equivalent to

$$[x_0,\ldots,x_n;f]=\sum_{i=0}^{n}\frac{f(x_i)}{q'(x_i)}, \quad \text{where } q(x)=\prod_{j=0}^{n}(x-x_j).$$

The following definition of a real valued convex function is characterized by nth-order divided difference (see [10, p. 15]).

Mathematics subject classification (2010): Primary 26D07, 26D15, 26D20, 26D99.
Keywords and phrases: Convex function, divided difference, Fink's identity, Čebyšev functional, Grüss inequality, Ostrowski inequality, exponential convexity.

Paper MIA-19-91

DEFINITION 2. A function $f:[a,b]\to\mathbb{R}$ is said to be n-convex $(n\geqslant 0)$ if and only if for all choices of $(n+1)$ distinct points $x_0,\dots,x_n\in[a,b]$, $[x_0,\dots,x_n;f]\geqslant 0$ holds.

If this inequality is reversed, then f is said to be n-concave. If the inequality is strict, then f is said to be a strictly n-convex (n-concave) function.

REMARK 1. Note that 0-convex functions are non-negative functions, 1-convex functions are increasing functions, and 2-convex functions are simply the convex functions.

The following theorem gives an important criteria to examine the n-convexity of a function f (see [10, p. 16]).

THEOREM 1. *If $f^{(n)}$ exists, then f is n-convex if and only if $f^{(n)}\geqslant 0$.*

In 1965, T. Popoviciu introduced a characterization of convex functions [11]. The inequality of Popoviciu as given by Vasić and Stanković in [12] can be written in the following form (see [10, p. 173]):

THEOREM 2. *Let $m,k\in\mathbb{N}$, $m\geqslant 3$, $2\leqslant k\leqslant m-1$, $[\alpha,\beta]\subset\mathbb{R}$, $\mathbf{x}=(x_1,\dots,x_m)\in[\alpha,\beta]^m$, $\mathbf{p}=(p_1,\dots,p_m)$ be a positive m-tuple such that $\sum_{i=1}^m p_i=1$. Also let $f:[\alpha,\beta]\to\mathbb{R}$ be a convex function. Then*

$$p_{k,m}(\mathbf{x},\mathbf{p};f)\leqslant\frac{m-k}{m-1}p_{1,m}(\mathbf{x},\mathbf{p};f)+\frac{k-1}{m-1}p_{m,m}(\mathbf{x},\mathbf{p};f),\tag{2}$$

where

$$p_{k,m}(\mathbf{x},\mathbf{p};f)=p_{k,m}(\mathbf{x},\mathbf{p};f(x)):=\frac{1}{C_{k-1}^{m-1}}\sum_{1\leqslant i_1<\dots<i_k\leqslant m}\left(\sum_{j=1}^k p_{i_j}\right)f\left(\frac{\sum\limits_{j=1}^k p_{i_j}x_{i_j}}{\sum\limits_{j=1}^k p_{i_j}}\right)$$

is the linear functional with respect to f.

In what follows in inequality (2), we will write

$$\Upsilon(\mathbf{x},\mathbf{p};f):=\frac{m-k}{m-1}p_{1,m}(\mathbf{x},\mathbf{p};f)+\frac{k-1}{m-1}p_{m,m}(\mathbf{x},\mathbf{p};f)-p_{k,m}(\mathbf{x},\mathbf{p};f).\tag{3}$$

REMARK 2. It is important to note that under the assumptions of Theorem 2, if the function f is convex then $\Upsilon(\mathbf{x},\mathbf{p};f)\geqslant 0$, and $\Upsilon(\mathbf{x},\mathbf{p};f)=0$ for $f(x)=x$ or when f is a constant function.

Consider the Green function $G:[\alpha,\beta]\times[\alpha,\beta]\to\mathbb{R}$ defined as

$$G(t,s)=\begin{cases}\frac{(t-\beta)(s-\alpha)}{\beta-\alpha}, & \alpha\leqslant s\leqslant t;\\ \frac{(s-\beta)(t-\alpha)}{\beta-\alpha}, & t\leqslant s\leqslant\beta.\end{cases}\tag{4}$$

The function G is convex and continuous w.r.t s and due to symmetry also w.r.t t.

For any function $\lambda : [\alpha,\beta] \to \mathbb{R}$, $\lambda \in C^2([\alpha,\beta])$, we have

$$\lambda(x) = \frac{\beta - x}{\beta - \alpha}\lambda(\alpha) + \frac{x - \alpha}{\beta - \alpha}\lambda(\beta) + \int_\alpha^\beta G(x,s)\lambda''(s)ds, \tag{5}$$

where the function G is defined in (4) (see [13]).

In the present paper, we use A. M. Fink's identity and prove many interesting results. The following theorem is proved by A. M. Fink in [6].

THEOREM 3. *Let $a,b \in \mathbb{R}$, $\lambda : [a,b] \to \mathbb{R}$, $n \geqslant 1$ and $\lambda^{(n-1)}$ is absolutely continuous on $[a,b]$. Then*

$$\begin{aligned}\lambda(x) = {} & \frac{n}{b-a}\int_a^b \lambda(t)\,dt \\ & - \sum_{w=1}^{n-1}\left(\frac{n-w}{w!}\right)\left(\frac{\lambda^{(w-1)}(a)(x-a)^w - \lambda^{(w-1)}(b)(x-b)^w}{b-a}\right) \\ & + \frac{1}{(n-1)!\,(b-a)}\int_a^b (x-t)^{n-1} w^{[a,b]}(t,x)\,\lambda^{(n)}(t)\,dt,\end{aligned} \tag{6}$$

where

$$w^{[a,b]}(t,x) = \begin{cases} t-a, & a \leqslant t \leqslant x \leqslant b, \\ t-b, & a \leqslant x < t \leqslant b. \end{cases} \tag{7}$$

The organization of the paper is as follows: In Section 2, we use Fink's identity and the n-convexity of the function λ to establish a generalization of Popoviciu's inequality. In Section 3, we present some interesting results by employing Čebyšev functional and Grüss-type inequalities, also results relating to the Ostrowski-type inequality. At the end we study the functional defined as the difference between the R.H.S. and the L.H.S. of the generalized inequality. Here our objective is to investigate the properties of the functional, such as n-exponential and logarithmic convexity.

2. Generalization of Popoviciu's inequality for n-convex functions via Green function and A. M. Fink's identity

Motivated by the identity (3), we use (5) and Fink's identity to prove the following generalized identity.

THEOREM 4. *Let $\lambda : [\alpha,\beta] \to \mathbb{R}$ be such that for $n \geqslant 3$, $\lambda^{(n-1)}$ is absolutely continuous and let $m,k \in \mathbb{N}$, $m \geqslant 3$, $2 \leqslant k \leqslant m-1$, $[\alpha,\beta] \subset \mathbb{R}$, $\mathbf{x} = (x_1,\ldots,x_m) \in [\alpha,\beta]^m$, $\mathbf{p} = (p_1,\ldots,p_m)$ be a real m-tuple such that $\sum_{j=1}^k p_{i_j} \neq 0$ for any $1 \leqslant i_1 < \ldots < i_k \leqslant m$ and $\sum_{i=1}^m p_i = 1$. Also let $\frac{\sum_{j=1}^k p_{i_j} x_{i_j}}{\sum_{j=1}^k p_{i_j}} \in [\alpha,\beta]$ for any $1 \leqslant i_1 < \ldots < i_k \leqslant m$ with G and*

$w^{[\alpha,\beta]}(t,x)$ be the same as defined in (4) and (7) respectively. Then we have the following identity:

$$\begin{aligned}
&\Upsilon(\mathbf{x},\mathbf{p};\lambda(x))\\
&= (n-2)\left(\frac{\lambda^{(1)}(\beta)-\lambda^{(1)}(\alpha)}{\beta-\alpha}\right)\int_\alpha^\beta \Upsilon(\mathbf{x},\mathbf{p};G(x,s))ds+\frac{1}{(\beta-\alpha)}\int_\alpha^\beta \Upsilon(\mathbf{x},\mathbf{p};G(x,s))\\
&\quad\times\left(\sum_{w=1}^{n-3}\left(\frac{n-2-w}{w!}\right)\left(\lambda^{(w+1)}(\beta)(s-\beta)^w-\lambda^{(w+1)}(\alpha)(s-\alpha)^w\right)\right)ds\\
&\quad+\frac{1}{(n-3)!(\beta-\alpha)}\int_\alpha^\beta \lambda^{(n)}(t)\left(\int_\alpha^\beta \Upsilon(\mathbf{x},\mathbf{p};G(x,s))(s-t)^{n-3}w^{[\alpha,\beta]}(t,s)ds\right)dt. \quad (8)
\end{aligned}$$

Proof. Using (5) in (3) and following the linearity of $\Upsilon(\mathbf{x},\mathbf{p};\lambda(x))$, we have

$$\Upsilon(\mathbf{x},\mathbf{p};\lambda(s)) = \int_\alpha^\beta \Upsilon(\mathbf{x},\mathbf{p};G(x,s))\lambda''(s)ds. \quad (9)$$

Differentiating (6), twice with respect variable s, we get

$$\begin{aligned}
\lambda''(s) &= \sum_{w=0}^{n-3}\left(\frac{n-2-w}{w!}\right)\left(\frac{\lambda^{(w+1)}(\beta)(s-\beta)^w-\lambda^{(w+1)}(\alpha)(s-\alpha)^w}{\beta-\alpha}\right)\\
&\quad+\frac{1}{(n-3)!(\beta-\alpha)}\int_\alpha^\beta (s-t)^{n-3}w^{[\alpha,\beta]}(t,s)\lambda^{(n)}(t)dt\\
&= \sum_{w=1}^{n-2}\left(\frac{n-1-w}{(w-1)!}\right)\left(\frac{\lambda^{(w)}(\beta)(s-\beta)^{w-1}-\lambda^{(w)}(\alpha)(s-\alpha)^{w-1}}{\beta-\alpha}\right)\\
&\quad+\frac{1}{(n-3)!(\beta-\alpha)}\int_\alpha^\beta (s-t)^{n-3}w^{[\alpha,\beta]}(t,s)\lambda^{(n)}(t)dt\\
&= (n-2)\left(\frac{\lambda^{(1)}(\beta)-\lambda^{(1)}(\alpha)}{\beta-\alpha}\right)\\
&\quad+\sum_{w=2}^{n-2}\left(\frac{n-1-w}{(w-1)!}\right)\left(\frac{\lambda^{(w)}(\beta)(s-\beta)^{w-1}-\lambda^{(w)}(\alpha)(s-\alpha)^{w-1}}{\beta-\alpha}\right)\\
&\quad+\frac{1}{(n-3)!(\beta-\alpha)}\int_\alpha^\beta (s-t)^{n-3}w^{[\alpha,\beta]}(t,s)\lambda^{(n)}(t)dt. \quad (10)
\end{aligned}$$

Using (10) in (9) and applying Fubini's Theorem in the last term we get (8).

Alternatively, we use formula (6) for the function λ'' and replace n by $n-2$ $(n \geqslant 3)$, to get

$$\begin{aligned}
\lambda''(s) = & (n-2)\left(\frac{\lambda^{(1)}(\beta)-\lambda^{(1)}(\alpha)}{\beta-\alpha}\right) \\
& +\sum_{w=1}^{n-3}\left(\frac{n-2-w}{w!}\right)\left(\frac{\lambda^{(w+1)}(\beta)(s-\beta)^{w}-\lambda^{(w+1)}(\alpha)(s-\alpha)^{w}}{\beta-\alpha}\right) \\
& +\frac{1}{(n-3)!(\beta-\alpha)}\int_{\alpha}^{\beta}(s-t)^{n-3}w^{[\alpha,\beta]}(t,s)\lambda^{(n)}(t)\,dt \qquad (11) \\
= & (n-2)\left(\frac{\lambda^{(1)}(\beta)-\lambda^{(1)}(\alpha)}{\beta-\alpha}\right) \\
& +\sum_{w=2}^{n-2}\left(\frac{n-1-w}{(w-1)!}\right)\left(\frac{\lambda^{(w)}(\beta)(s-\beta)^{w-1}-\lambda^{(w)}(\alpha)(s-\alpha)^{w-1}}{\beta-\alpha}\right) \\
& +\frac{1}{(n-3)!(\beta-\alpha)}\int_{\alpha}^{\beta}(s-t)^{n-3}w^{[\alpha,\beta]}(t,s)\lambda^{(n)}(t)\,dt.
\end{aligned}$$

Now using (11) in (9) and applying Fubini's Theorem in the last term we get (8). □

The following theorem gives a generalization of Popoviciu's inequality for n-convex functions.

THEOREM 5. *Let all the assumptions of Theorem 4 be satisfied and let for* $n \geqslant 3$

$$\int_{\alpha}^{\beta}\Upsilon(\mathbf{x},\mathbf{p};G(x,s))(s-t)^{n-3}w^{[\alpha,\beta]}(t,s)ds \geqslant 0,\ t\in[\alpha,\beta]. \qquad (12)$$

If λ *is* n*-convex function such that* $\lambda^{(n-1)}$ *is absolutely continuous, then we have*

$$\begin{aligned}
& \Upsilon(\mathbf{x},\mathbf{p};\lambda(x)) \\
& \geqslant (n-2)\left(\frac{\lambda^{(1)}(\beta)-\lambda^{(1)}(\alpha)}{\beta-\alpha}\right)\int_{\alpha}^{\beta}\Upsilon(\mathbf{x},\mathbf{p};G(x,s))ds+\frac{1}{(\beta-\alpha)}\int_{\alpha}^{\beta}\Upsilon(\mathbf{x},\mathbf{p};G(x,s)) \\
& \times\left(\sum_{w=1}^{n-3}\left(\frac{n-2-w}{w!}\right)\left(\lambda^{(w+1)}(\beta)(s-\beta)^{w}-\lambda^{(w+1)}(\alpha)(s-\alpha)^{w}\right)\right)ds. \qquad (13)
\end{aligned}$$

Proof. Since $\lambda^{(n-1)}$ is absolutely continuous on $[\alpha,\beta]$, $\lambda^{(n)}$ exists almost everywhere. As λ is n-convex, applying Theorem 1, we have, $\lambda^{(n)} \geqslant 0$ for all $x\in[\alpha,\beta]$. Hence we can apply Theorem 4 to obtain (13). □

Now we obtain a generalization of Popoviciu's inequality for m-tuples.

THEOREM 6. *Let in addition to the assumptions of Theorem 4,* $\mathbf{p}=(p_1,\ldots,p_m)$ *be a positive* m*-tuple such that* $\sum_{i=1}^{m}p_i=1$*, and* $\lambda:[\alpha,\beta]\to\mathbb{R}$ *be an* n*-convex function.*

(i) If n is even and $n > 3$, then (13) holds.

(ii) Let the inequality (13) be satisfied and

$$\sum_{w=0}^{n-3}\left(\frac{n-2-w}{w!}\right)\left(\lambda^{(w+1)}(\beta)(s-\beta)^{w}-\lambda^{(w+1)}(\alpha)(s-\alpha)^{w}\right)\geqslant 0. \tag{14}$$

Then we have

$$\Upsilon(\mathbf{x},\mathbf{p};\lambda(x))\geqslant 0. \tag{15}$$

Proof.

(i) Since Green's function $G(x,s)$ is convex and the weights are positive. So $\Upsilon(\mathbf{x},\mathbf{p};G(x,s))\geqslant 0$ by virtue of Remark 2. Also, since

$$\vartheta(s):=(s-t)^{n-3}w^{[\alpha,\beta]}(t,s)=\begin{cases}(s-t)^{n-3}(t-\alpha), & \alpha\leqslant t\leqslant s\leqslant\beta,\\ (s-t)^{n-3}(t-\beta), & \alpha\leqslant s<t\leqslant\beta,\end{cases}$$

ϑ is positive for even n, where $n>3$. So, (12) holds for even n. Now following Theorem 5, we can obtain (13).

(ii) Using (14) in (13), we get (15). □

3. Bounds for identities related to generalization of Popoviciu's inequality

In this section we present some interesting results by using Čebyšev functional and Grüss type inequalities. For two Lebesgue integrable functions $f,h:[\alpha,\beta]\to\mathbb{R}$, we consider the Čebyšev functional

$$\Delta(f,h)=\frac{1}{\beta-\alpha}\int_{\alpha}^{\beta}f(t)h(t)dt-\frac{1}{\beta-\alpha}\int_{\alpha}^{\beta}f(t)dt.\frac{1}{\beta-\alpha}\int_{\alpha}^{\beta}h(t)dt.$$

The following Grüss type inequalities are given in [5].

THEOREM 7. *Let $f:[\alpha,\beta]\to\mathbb{R}$ be a Lebesgue integrable function and $h:[\alpha,\beta]\to\mathbb{R}$ be an absolutely continuous function with $(.-\alpha)(\beta-.)[h']^2\in L[\alpha,\beta]$. Then we have the inequality*

$$|\Delta(f,h)|\leqslant\frac{1}{\sqrt{2}}[\Delta(f,f)]^{\frac{1}{2}}\frac{1}{\sqrt{\beta-\alpha}}\left(\int_{\alpha}^{\beta}(x-\alpha)(\beta-x)[h'(x)]^2dx\right)^{\frac{1}{2}}. \tag{16}$$

The constant $\frac{1}{\sqrt{2}}$ in (16) is the best possible.

THEOREM 8. *Assume that* $h:[\alpha,\beta]\to\mathbb{R}$ *is monotonic nondecreasing on* $[\alpha,\beta]$ *and* $f:[\alpha,\beta]\to\mathbb{R}$ *be an absolutely continuous with* $f'\in L_\infty[\alpha,\beta]$. *Then we have the inequality*

$$|\Delta(f,h)|\leqslant\frac{1}{2(\beta-\alpha)}||f'||_\infty\int_\alpha^\beta(x-\alpha)(\beta-x)dh(x). \tag{17}$$

The constant $\frac{1}{2}$ *in* (17) *is the best possible.*

In the sequel, we consider above theorems to derive generalizations of the results proved in the previous section. In what follows we let

$$\mathfrak{O}(t)=\int_\alpha^\beta\Upsilon(\mathbf{x},\mathbf{p};G(x,s))(s-t)^{n-3}w^{[\alpha,\beta]}(t,s)ds\geqslant 0,\ t\in[\alpha,\beta]. \tag{18}$$

THEOREM 9. *Let* $\lambda:[\alpha,\beta]\to\mathbb{R}$ *be such that for* $n\geqslant 3$, $\lambda^{(n)}$ *is absolutely continuous with* $(.-\alpha)(\beta-.)[\lambda^{(n+1)}]^2\in L[\alpha,\beta]$. *Let* $m,k\in\mathbb{N}$, $m\geqslant 3$, $2\leqslant k\leqslant m-1$, $[\alpha,\beta]\subset\mathbb{R}$, $\mathbf{x}=(x_1,...,x_m)\in[\alpha,\beta]^m$, $\mathbf{p}=(p_1,...,p_m)$ *be a real* m*-tuple such that* $\sum_{j=1}^k p_{i_j}\neq 0$ *for any* $1\leqslant i_1<...<i_k\leqslant m$ *and* $\sum_{i=1}^m p_i=1$. *Also let* $\frac{\sum_{j=1}^k p_{i_j}x_{i_j}}{\sum_{j=1}^k p_{i_j}}\in[\alpha,\beta]$ *for any* $1\leqslant i_1<...<i_k\leqslant m$ *with* $\mathfrak{O}$ *defined in* (18). *Then the remainder* $\mathfrak{K}_n(\alpha,\beta;\lambda)$ *given in the following identity*

$$\begin{aligned}\Upsilon(\mathbf{x},\mathbf{p};\lambda(x))=&\int_\alpha^\beta\Upsilon(\mathbf{x},\mathbf{p};G(x,s))\\&\times\sum_{w=0}^{n-3}\left(\frac{n-2-w}{w!}\right)\left(\frac{\lambda^{(w+1)}(\beta)(s-\beta)^w-\lambda^{(w+1)}(\alpha)(s-\alpha)^w}{\beta-\alpha}\right)ds\\&+\frac{\lambda^{(n-1)}(\beta)-\lambda^{(n-1)}(\alpha)}{(\beta-\alpha)^2(n-3)!}\int_\alpha^\beta\mathfrak{O}(t)dt+\mathfrak{K}_n(\alpha,\beta;\lambda),\end{aligned} \tag{19}$$

satisfies the bound

$$|\mathfrak{K}_n(\alpha,\beta;\lambda)|\leqslant\frac{1}{\sqrt{2}(n-3)!}[\Delta(\mathfrak{O},\mathfrak{O})]^{\frac{1}{2}}\frac{1}{\sqrt{\beta-\alpha}}\left|\int_\alpha^\beta(t-\alpha)(\beta-t)[\lambda^{(n+1)}(t)]^2dt\right|^{\frac{1}{2}}.$$

Proof. The proof is the direct application of Theorem 7 by making substitutions $f\to\mathfrak{O}$ and $h\to\lambda^{(n)}$. □

The following Grüss type inequalities can be obtained by using Theorem 8.

THEOREM 10. *Let* $\lambda:[\alpha,\beta]\to\mathbb{R}$ *be such that for* $n\geqslant 3$, $\lambda^{(n)}$ *is absolutely continuous and let* $\lambda^{(n+1)}\geqslant 0$ *on* $[\alpha,\beta]$ *with* $\mathfrak{O}$ *defined in* (18). *Then in the representation* (19) *the remainder* $\mathfrak{K}_n(\alpha,\beta;\lambda)$ *satisfies the estimate*

$$|\mathfrak{K}_n(\alpha,\beta;\lambda)|\leqslant\frac{||\mathfrak{O}'||_\infty}{(n-3)!}\left[\frac{\lambda^{(n-1)}(\beta)+\lambda^{(n-1)}(\alpha)}{2}-\frac{\lambda^{(n-2)}(\beta)-\lambda^{(n-2)}(\alpha)}{\beta-\alpha}\right].$$

Proof. Applying Theorem 8 for $f \to \mathfrak{O}$ and $h \to \lambda^{(n)}$ and following the steps of Theorem 3.4 in [3] (see also [4]), we get above result. □

Next we present an Ostrowski type inequality related to generalizations of Popoviciu's inequality.

THEOREM 11. *Suppose all the assumptions of Theorem 4 be satisfied. Moreover, assume that (p,q) is a pair of conjugate exponents, that is $p,q \in [1,\infty]$ such that $1/p+1/q=1$. Let $|\lambda^{(n)}|^p : [\alpha,\beta] \to \mathbb{R}$ be a R-integrable function for some $n \geqslant 3$. Then, we have*

$$\left|\Upsilon(\mathbf{x},\mathbf{p};\lambda(x)) - \int_\alpha^\beta \Upsilon(\mathbf{x},\mathbf{p};G(x,s)) \times \sum_{w=0}^{n-3}\left(\frac{n-2-w}{w!}\right)\left(\frac{\lambda^{(w+1)}(\beta)(s-\beta)^w - \lambda^{(w+1)}(\alpha)(s-\alpha)^w}{\beta-\alpha}\right)ds\right|$$
$$\leqslant \frac{1}{(n-3)!\beta-\alpha}||\lambda^{(n)}||_p\left(\int_\alpha^\beta\left|\int_\alpha^\beta \Upsilon(\mathbf{x},\mathbf{p};G(x,s))(s-t)^{n-3}w^{[\alpha,\beta]}(t,s)ds\right|^q dt\right)^{1/q}. \quad (20)$$

The constant on the R.H.S. of (20) is sharp for $1 < p \leqslant \infty$ and the best possible for $p=1$.

Proof. The proof is similar to the Theorem 3.5 in [3] (see also [4]). □

4. Mean value theorems and n-exponential convexity

In the present section, we construct a positive linear functional and then give mean value theorems of Lagrange and Cauchy type.

REMARK 3. In virtue of Theorem 5, we can define the positive linear functional with respect to n-convex function λ as follows

$$\Gamma(\lambda) := \Upsilon(\mathbf{x},\mathbf{p};\lambda(x)) - \int_\alpha^\beta \Upsilon(\mathbf{x},\mathbf{p};G(x,s)) \times \sum_{w=0}^{n-3}\left(\frac{n-2-w}{w!}\right)\left(\frac{\lambda^{(w+1)}(\beta)(s-\beta)^w - \lambda^{(w+1)}(\alpha)(s-\alpha)^w}{\beta-\alpha}\right)ds \geqslant 0. \quad (21)$$

Lagrange and Cauchy type mean value theorems related to above functional are given in the following theorems.

THEOREM 12. *Let $\lambda : [\alpha,\beta] \to \mathbb{R}$ be such that $\lambda \in C^n[\alpha,\beta]$. If the inequality in (12) holds, then there exist $\xi \in [\alpha,\beta]$ such that*

$$\Gamma(\lambda) = \lambda^{(n)}(\xi)\Gamma(\varphi),$$

where $\varphi(x) = \frac{x^n}{n!}$ and $\Gamma(\cdot)$ is defined by (21).

Proof. Similar to the proof of Theorem 4.1 in [8] (see also [1]). □

THEOREM 13. *Let* $\lambda, \psi : [\alpha, \beta] \to \mathbb{R}$ *be such that* $\lambda, \psi \in C^n[\alpha, \beta]$. *If the inequality in (12) holds, then there exist* $\xi \in [\alpha, \beta]$ *such that*

$$\frac{\Gamma(\lambda)}{\Gamma(\psi)} = \frac{\lambda^{(n)}(\xi)}{\psi^{(n)}(\xi)},$$

provided that the denominators are non-zero, where $\Gamma(\cdot)$ *is defined by (21).*

Proof. Similar to the proof of Corollary 4.2 in [8] (see also [1]). □

Theorem 13 enables us to define Cauchy means, in fact

$$\xi = \left(\frac{\lambda^{(n)}}{\psi^{(n)}}\right)^{-1} \left(\frac{\Gamma(\lambda)}{\Gamma(\psi)}\right),$$

means that ξ is the mean of α, β for given functions λ and ψ.

We conclude our paper with the following remark.

REMARK 4. One can construct the non trivial examples of $n-$exponentially and exponentially convex functions from positive linear functional $\Gamma(\cdot)$ by following the $n-$exponentially method introduced by Pečarić et.al. in [7] and [9] (see also [2], [3] and [4]). As an application to Cauchy means, it enables us to construct a large families of functions which are exponentially convex.

Acknowledgements. The research of 2nd author has been fully supported by H. E. C. Pakistan. The research of 3rd and 4th author has been fully supported by Croatian Science Foundation under the project 5435.

REFERENCES

[1] S. I. BUTT AND J. PEČARIĆ, *Generalized Hermite-Hadamard's Inequality*, Proc. A. Razmadze Math. Inst. **163** (2013), 9–27.

[2] S. I. BUTT, J. PEČARIĆ AND A. VUKELIĆ, *Generalization of Popoviciu type inequalities Via Fink's identity*, Mediterr. J. Math. (to appear).

[3] S. I. BUTT, K. A. KHAN AND J. PEČARIĆ, *Further generalization of Popoviciu inequality for higher order convex functions via Taylor polynomial*, Turkish J. Math. **40** (2016), 333–349.

[4] S. I. BUTT, K. A. KHAN AND J. PEČARIĆ, *Popoviciu type inequalities Via Green function and generalized Montgomery identity*, Math. Inequal. Appl. **18** (4) (2015), 1519–1538.

[5] P. CERONE AND S. S. DRAGOMIR, *Some new Ostrowski-type bounds for the Čebyšev functional and applications*, J. Math. Inequal. **8** (1) (2014), 159–170.

[6] A. M. FINK, *Bounds of the deviation of a function from its averegeś*, Czechoslovak Math. J. **42** (117) (1992), 289–310.

[7] J. JAKŠETIC AND J. PEČARIĆ, *Exponential Convexity Method*, J. Convex Anal. **20** (1) (2013), 181–197.

[8] J. JAKŠETIĆ, J. PEČARIĆ AND A. PERUŠIĆ, *Steffensen inequality, higher order convexity and exponential convexity*, Rend. Circ. Mat. Palermo. **63** (1) (2014), 109–127.

[9] J. PEČARIĆ AND J. PERIĆ, *Improvement of the Giaccardi and the Petrović Inequality and Related Stolarsky Type Means*, An. Univ. Craiova Ser. Mat. Inform. **39** (1) (2012), 65–75.
[10] J. PEČARIĆ, F. PROSCHAN AND Y. L. TONG, *Convex functions, Partial Orderings and Statistical Applications*, Academic Press, New York, (1992).
[11] T. POPOVICIU, *Sur certaines inegalites qui caracterisent les fonctions convexes*, Analele Ştiinţifice Univ. Al. I. Cuza, Iasi, Sectia Mat. **11** (1965), 155–164.
[12] P. M. VASIĆ AND LJ. R. STANKOVIĆ, *Some inequalities for convex functions*, Math. Balkanica. **6** (44) (1976), 281–288.
[13] D. V. WIDDER, *Completely convex function and Lidstone series*, Trans. Am. Math. Soc. **51** (1942), 387–398.

(Received March 12, 2016)

Ravi P. Agarwal
Department of Mathematics, Texas A&M University – Kingsville
700 University Blvd, Kingsville, USA
e-mail: Agarwal@tamuk.edu

Saad Ihsan Butt
Department of Mathematics, COMSATS
Institute of Information Technology
Lahore, Pakistan
e-mail: saadihsanbutt@gmail.com

Josip Pečarić
Faculty of Textile Technology, University of Zagreb
10000 Zagreb, Croatia
e-mail: pecaric@mahazu.hazu.hr

Ana Vukelić
Faculty of Food Technology and Biotechnology
Mathematics Department, University of Zagreb
Pierottijeva 6, 10000 Zagreb, Croatia
e-mail: avukelic@pbf.hr

Mathematical
Inequalities
& Applications
Volume 19, Number 4 (2016), 1257–1269 doi:10.7153/mia-19-92

GENERALIZATION OF MAJORIZATION THEOREM VIA TAYLOR'S FORMULA

SAAD IHSAN BUTT, LJILJANKA KVESIĆ AND JOSIP PEČARIĆ

(*Communicated by S. Varošanec*)

Abstract. We give generalization of majorization theorem for the class of n-convex functions by using Taylor's formula. We use inequalities for the Čebyšev functional to obtain bounds for the identities related to generalizations of majorization inequalities. We present mean value theorems and $n-$exponential convexity for the functional obtained from the generalized majorization inequalities. At the end we discuss the results for particular families of function and give means.

1. Introduction

Majorization gives us the precise answer about the location of the components of the vector $\mathbf{x}$ respected to that of vector $\mathbf{y}$. The well known Majorization theorem given by Marshall and Olkin [11] (see also [15], p. 320):

THEOREM 1. *Let I be an interval in $\mathbb{R}$ and let $\mathbf{x},\mathbf{y}$ be two n-tuples such that $x_i, y_i \in I$ $(i = 1,\dots,n)$. Then*

$$\sum_{i=1}^{n} \phi(y_i) \leqslant \sum_{i=1}^{n} \phi(x_i)$$

holds for every continuous convex function $\phi : I \to \mathbb{R}$ iff

$$\sum_{i=1}^{m} y_{[i]} \leqslant \sum_{i=1}^{m} x_{[i]}$$

holds for $m = 1,2,\dots,n-1$ and

$$\sum_{i=1}^{n} y_{[i]} = \sum_{i=1}^{n} x_{[i]}.$$

The generalization of Theorem 1 was given by Fuchs in [6] as weighted Majorization Theorem (see also [15], p. 323):

Mathematics subject classification (2010): Primary 26D07, 26D15, 26D20, 26D99.
Keywords and phrases: Convex function, divided difference, Taylor's formula, Čebyšev functional, Grüss inequality, Ostrowski inequality, exponential convexity.

Paper MIA-19-92

THEOREM 2. *Let* $\mathbf{x},\mathbf{y}$ *be two decreasing* n*-tuples from an interval* I*, let* $\mathbf{w} = (w_1,\dots,w_n)$ *be a real* n*-tuple such that*

$$\sum_{i=1}^{k} w_i y_i \leqslant \sum_{i=1}^{k} w_i x_i, \text{ for } k = 1,\dots,n-1; \tag{1}$$

and

$$\sum_{i=1}^{n} w_i y_i = \sum_{i=1}^{n} w_i x_i. \tag{2}$$

Then for every continuous convex function $\phi : I \to \mathbb{R}$*, we have*

$$\sum_{i=1}^{n} w_i \phi(y_i) \leqslant \sum_{i=1}^{n} w_i \phi(x_i). \tag{3}$$

The following integral version of Theorem 2 is a simple consequence of Theorem A in [13] (see also [15], p. 328):

THEOREM 3. *Let* $x,y : [a,b] \to [\alpha,\beta]$ *such that* $[\alpha,\beta] \subset I$ *be decreasing and* $w : [a,b] \to \mathbb{R}$ *be continuous functions. If*

$$\int_a^v w(t)y(t)dt \leqslant \int_a^v w(t)x(t)dt \text{ for every } v \in [a,b] \tag{4}$$

and

$$\int_a^b w(t)y(t)dt = \int_a^b w(t)x(t)dt \tag{5}$$

hold, then for every continuous convex function $\phi : I \to \mathbb{R}$*, we have*

$$\int_a^b w(t)\phi((y(t))dt \leqslant \int_a^b w(t)\phi(x(t))dt. \tag{6}$$

For other integral version and generalization of majorization theorem see ([11], p. 583) (see also [12], [1], [10]). The classical Taylor's formula with integral remainder can be stated as:

THEOREM 4. *Let* n *be a positive integer and* $\phi : [a,b] \to \mathbb{R}$ *be such that* $\phi^{(n-1)}$ *is absolutely continuous, then for all* $x \in [a,b]$ *the Taylor's formula at the point* $c \in [a,b]$ *is*

$$\phi(x) = T_{n-1}(\phi;c,x) + R_{n-1}(\phi;c,x),$$

where $T_{n-1}(\phi;c,x)$ *is a Taylor's polynomial of degree* $n-1$*, i.e.*

$$T_{n-1}(\phi;c,x) = \sum_{k=0}^{n-1} \frac{\phi^{(k)}(c)}{k!}(x-c)^k$$

and the remainder is given by

$$R_{n-1}(\phi;c,x) = \frac{1}{(n-1)!}\int_c^x \phi^{(n)}(t)(x-t)^{n-1}dt.$$

In rest of the paper, we need the following real valued function of our interest defined as:

$$(x-t)_+ = \begin{cases} x-t, & t \leqslant x, \\ 0, & t > x. \end{cases}$$

For two Lebesgue integrable functions $f,h : [\alpha,\beta] \to \mathbb{R}$, we consider the Čebyšev functional

$$\Delta(f,h) = \frac{1}{\beta-\alpha}\int_\alpha^\beta f(t)h(t)dt - \frac{1}{\beta-\alpha}\int_\alpha^\beta f(t)dt \cdot \frac{1}{\beta-\alpha}\int_\alpha^\beta h(t)dt.$$

In [5] the authors proved the following theorems:

THEOREM 5. *Let $f : [\alpha,\beta] \to \mathbb{R}$ be a Lebesgue integrable function and $h : [\alpha,\beta] \to \mathbb{R}$ be an absolutely continuous function with $(.-\alpha)(\beta-.)[h']^2 \in L[\alpha,\beta]$. Then we have the inequality*

$$|\Delta(f,h)| \leqslant \frac{1}{\sqrt{2}}[\Delta(f,f)]^{\frac{1}{2}} \frac{1}{\sqrt{\beta-\alpha}}\left(\int_\alpha^\beta (x-\alpha)(\beta-x)[h'(x)]^2 dx\right)^{\frac{1}{2}}. \tag{7}$$

The constant $\frac{1}{\sqrt{2}}$ in (7) is the best possible.

THEOREM 6. *Assume that $h : [\alpha,\beta] \to \mathbb{R}$ is monotonic nondecreasing on $[\alpha,\beta]$ and $f : [\alpha,\beta] \to \mathbb{R}$ be an absolutely continuous with $f' \in L_\infty[\alpha,\beta]$. Then we have the inequality*

$$|\Delta(f,h)| \leqslant \frac{1}{2(\beta-\alpha)}||f'||_\infty \int_\alpha^\beta (x-\alpha)(\beta-x)dh(x). \tag{8}$$

The constant $\frac{1}{2}$ in (8) is the best possible.

2. Main results

We start the section with the proof of identities obtained by using Taylor's formula.

THEOREM 7. *Let $\phi : [\alpha,\beta] \to \mathbb{R}$ be such that $\phi^{(n-1)}$ is absolutely continuous for some $n \geqslant 1$ and let $\mathbf{w} = (w_1,\ldots,w_m)$, $\mathbf{x} = (x_1,\ldots,x_m)$ and $\mathbf{y} = (y_1,\ldots,y_m)$ be m-tuples such that $x_i, y_i \in [\alpha,\beta]$, $w_i \in \mathbb{R}$ $(i = 1,\ldots,m)$. Then*

$$\begin{aligned} &\sum_{i=1}^m w_i\phi(x_i) - \sum_{i=1}^m w_i\phi(y_i) \\ &= \sum_{k=1}^{n-1} \frac{\phi^{(k)}(\alpha)}{k!}\left(\sum_{i=1}^m w_i(x_i-\alpha)^k - \sum_{i=1}^m w_i(y_i-\alpha)^k\right) \\ &\quad + \frac{1}{(n-1)!}\int_\alpha^\beta \left[\sum_{i=1}^m w_i((x_i-t)_+)^{n-1} - \sum_{i=1}^m w_i((y_i-t)_+)^{n-1}\right]\phi^{(n)}(t)dt, \end{aligned} \tag{9}$$

and

$$\begin{aligned}
&\sum_{i=1}^{m} w_i\phi(x_i) - \sum_{i=1}^{m} w_i\phi(y_i) \\
&= \sum_{k=1}^{n-1} \frac{\phi^{(k)}(\beta)}{k!}\left(\sum_{i=1}^{m} w_i(\beta - x_i)^k - \sum_{i=1}^{m} w_i(\beta - y_i)^k\right)(-1)^k \\
&\quad - \frac{1}{(n-1)!}\int_{\alpha}^{\beta}(-1)^{n-1}\left[\sum_{i=1}^{m} w_i((t-x_i)_+)^{n-1} - \sum_{i=1}^{m} w_i((t-y_i)_+)^{n-1}\right]\phi^{(n)}(t)dt. \quad (10)
\end{aligned}$$

Proof. Using Taylor's formula at point α in $\sum_{i=1}^{m} w_i\phi(x_i) - \sum_{i=1}^{m} w_i\phi(y_i)$, we have

$$\begin{aligned}
&\sum_{i=1}^{m} w_i\phi(x_i) - \sum_{i=1}^{m} w_i\phi(y_i) \\
&= \sum_{i=1}^{m} w_i\left(\sum_{k=0}^{n-1} \frac{\phi^{(k)}(\alpha)}{k!}(x_i-\alpha)^k + \frac{1}{(n-1)!}\int_{\alpha}^{x_i}\phi^{(n)}(t)(x_i-t)^{n-1}dt\right) \\
&\quad - \sum_{i=1}^{m} w_i\left(\sum_{k=0}^{n-1} \frac{\phi^{(k)}(\alpha)}{k!}(y_i-\alpha)^k + \frac{1}{(n-1)!}\int_{\alpha}^{y_i}\phi^{(n)}(t)(y_i-t)^{n-1}dt\right) \\
&= \sum_{k=1}^{n-1} \frac{\phi^{(k)}(\alpha)}{k!}\left(\sum_{i=1}^{m} w_i(x_i-\alpha)^k - \sum_{i=1}^{m} w_i(y_i-\alpha)^k\right) \\
&\quad + \frac{1}{(n-1)!}\int_{\alpha}^{x_i}\sum_{i=1}^{m} w_i(x_i-t)^{n-1}\phi^{(n)}(t)dt - \frac{1}{(n-1)!}\int_{\alpha}^{y_i}\sum_{i=1}^{m} w_i(y_i-t)^{n-1}\phi^{(n)}(t)dt \\
&= \sum_{k=1}^{n-1} \frac{\phi^{(k)}(\alpha)}{k!}\left(\sum_{i=1}^{m} w_i(x_i-\alpha)^k - \sum_{i=1}^{m} w_i(y_i-\alpha)^k\right) \\
&\quad + \frac{1}{(n-1)!}\int_{\alpha}^{\beta}\sum_{i=1}^{m} w_i((x_i-t)_+)^{n-1}\phi^{(n)}(t)dt - \frac{1}{(n-1)!}\int_{\alpha}^{\beta}\sum_{i=1}^{m} w_i((y_i-t)_+)^{n-1}\phi^{(n)}(t)dt
\end{aligned}$$

where

$$\int_{\alpha}^{\beta}\sum_{i=1}^{m} w_i((x_i-t)_+)^{n-1}\phi^{(n)}(t)dt = \int_{\alpha}^{x_i}\sum_{i=1}^{m} w_i(x_i-t)^{n-1}\phi^{(n)}(t)dt + \int_{x_i}^{\beta} 0$$

and

$$\int_{\alpha}^{\beta}\sum_{i=1}^{m} w_i((y_i-t)_+)^{n-1}\phi^{(n)}(t)dt = \int_{\alpha}^{y_i}\sum_{i=1}^{m} w_i(y_i-t)^{n-1}\phi^{(n)}(t)dt + \int_{y_i}^{\beta} 0$$

So by using above result we will get (9).

Similarly using Taylor's formula at point β in $\sum_{i=1}^{m} w_i\phi(x_i) - \sum_{i=1}^{m} w_i\phi(y_i)$, we get (10). □

Integral version of the above theorem can be stated as:

THEOREM 8. *Let $\phi : [\alpha,\beta] \to \mathbb{R}$ be such that $\phi^{(n-1)}$ is absolutely continuous for some $n \geqslant 1$ and let $x,y : [a,b] \to [\alpha,\beta]$, $w : [a,b] \to \mathbb{R}$ be continuous functions. Then*

$$\begin{aligned}
&\int_a^b w(\tau)\phi(x(\tau))d\tau - \int_a^b w(\tau)\phi(y(\tau))d\tau \\
&= \sum_{k=1}^{n-1} \frac{\phi^{(k)}(\alpha)}{k!}\left(\int_a^b w(\tau)\left[(x(\tau)-\alpha)^k - (y(\tau)-\alpha)^k\right]d\tau\right) \\
&\quad + \frac{1}{(n-1)!}\int_\alpha^\beta \left(\int_a^b w(\tau)\left[((x(\tau)-t)_+)^{n-1} - ((y(\tau)-t)_+)^{n-1}\right]d\tau\right)\phi^{(n)}(t)dt,
\end{aligned} \tag{11}$$

and

$$\begin{aligned}
&\int_a^b w(\tau)\phi(x(\tau))d\tau - \int_a^b w(\tau)\phi(y(\tau))d\tau \\
&= \sum_{k=1}^{n-1} \frac{\phi^{(k)}(\beta)}{k!}\left(\int_a^b w(\tau)\left[(\beta-x(\tau))^k - (\beta-y(\tau))^k\right]d\tau\right)(-1)^k \\
&\quad - \frac{1}{(n-1)!}\int_\alpha^\beta (-1)^{n-1}\left(\int_a^b w(\tau)\left[((t-x(\tau))_+)^{n-1} - ((t-y(\tau))_+)^{n-1}\right]d\tau\right)\phi^{(n)}(t)dt.
\end{aligned} \tag{12}$$

In the following theorem we obtain generalizations of majorization inequality for n-convex functions.

THEOREM 9. *Let $\phi : [\alpha,\beta] \to \mathbb{R}$ be such that $\phi^{(n-1)}$ is absolutely continuous for some $n \geqslant 1$ and let $\mathbf{w} = (w_1,\ldots,w_m)$, $\mathbf{x} = (x_1,\ldots,x_m)$ and $\mathbf{y} = (y_1,\ldots,y_m)$ be m-tuples such that $x_i, y_i \in [\alpha,\beta]$, $w_i \in \mathbb{R}$ $(i = 1,\ldots,m)$. Then*

(i) if ϕ is n-convex function and

$$\sum_{i=1}^m w_i((x_i-t)_+)^{n-1} - \sum_{i=1}^m w_i((y_i-t)_+)^{n-1} \geqslant 0, \quad t \in [\alpha,\beta], \tag{13}$$

then

$$\sum_{i=1}^m w_i\phi(x_i) - \sum_{i=1}^m w_i\phi(y_i) \geqslant \sum_{k=1}^{n-1} \frac{\phi^{(k)}(\alpha)}{k!}\left(\sum_{i=1}^m w_i(x_i-\alpha)^k - \sum_{i=1}^m w_i(y_i-\alpha)^k\right). \tag{14}$$

(ii) If ϕ is n-convex function and

$$(-1)^{n-1}\left(\sum_{i=1}^m w_i((t-x_i)_+)^{n-1} - \sum_{i=1}^m w_i((t-y_i)_+)^{n-1}\right) \leqslant 0, \quad t \in [\alpha,\beta], \tag{15}$$

then

$$\sum_{i=1}^m w_i\phi(x_i) - \sum_{i=1}^m w_i\phi(y_i) \geqslant \sum_{k=1}^{n-1} \frac{\phi^{(k)}(\beta)}{k!}\left(\sum_{i=1}^m w_i(\beta-x_i)^k - \sum_{i=1}^m w_i(\beta-y_i)^k\right)(-1)^k. \tag{16}$$

Proof. Since the function ϕ is n-convex, therefore without loss of generality we can assume that ϕ is n-times differentiable and $\phi^{(n)} \geqslant 0$ (see [15], p. 16). Hence we can apply Theorem 7 to obtain (14) and (16) respectively. □

In the following Corollary, we give generalization of Fuch's majorization theorem.

COROLLARY 1. *Let all the assumptions of Theorem 7 be satisfied,* $\mathbf{x} = (x_1, \ldots, x_m)$, $\mathbf{y} = (y_1, \ldots, y_m)$ *be decreasing* m*-tuples and* $\mathbf{w} = (w_1, \ldots, w_m)$ *be any* m*-tuple such that* $x_i, y_i \in [\alpha, \beta]$, $w_i \in \mathbb{R}$ $(i = 1, \ldots, m)$ *which satisfies* (1), (2) *and* $\phi : [\alpha, \beta] \to \mathbb{R}$ *is* n*-convex function. Then*

(i) for $n \geqslant 1$, (14) *holds. Moreover, let the inequality* (14) *be satisfied. If the function*

$$F_1(x) := \sum_{k=1}^{n-1} \frac{\phi^{(k)}(\alpha)}{k!}(x-\alpha)^k. \tag{17}$$

is convex, the R.H.S. of (14) *is non negative, that is* (3) *holds.*

(ii) If n *is even, then* (16) *holds. Moreover, let the inequality* (16) *be satisfied. If the function*

$$F_2(x) := \sum_{k=1}^{n-1} \frac{(-1)^k \phi^{(k)}(\beta)}{k!}(\beta-x)^k. \tag{18}$$

is convex, the R.H.S. of (16) *is non negative, that is* (3) *holds.*

Proof. (i) On account of given m-tuples satisfying (1), (2) and the function $x \mapsto ((x-t)_+)^{n-1}$ being convex for given n, (13) holds by virtue of Theorem 2. Therefore by following Theorem 9 we can obtain (14). Moreover, we can rewrite the R.H.S. of (14) in the form of the L.H.S. with $\phi = F_1$, where F_1 is defined in (17) and will be obtained after reorganization of this side. Since F_1 is assumed to be convex, therefore using the given conditions on m-tuples and by following Theorem 2 the non negativity of R.H.S. of (14) is immediate, that is (3) holds.

Similarly we can prove the part (ii). □

3. New upper bounds via Čebyšev functional

In the sequel, we consider Theorems 5 and 6 to derive generalizations of the results proved in the previous section. Let $\mathbf{w} = (w_1, \ldots, w_m)$, $\mathbf{x} = (x_1, \ldots, x_m)$ and $\mathbf{y} = (y_1, \ldots, y_m)$ be m-tuples such that $x_i, y_i \in [\alpha, \beta]$, $w_i \in \mathbb{R}$ $(i = 1, \ldots, m)$, denote

$$\mathfrak{R}(t) = \sum_{i=1}^{m} w_i((x_i - t)_+)^{n-1} - \sum_{i=1}^{m} w_i((y_i - t)_+)^{n-1}, \quad t \in [\alpha, \beta], \tag{19}$$

$$\mathfrak{B}(t) = (-1)^{n-1}\left(\sum_{i=1}^{m} w_i((t - x_i)_+)^{n-1} - \sum_{i=1}^{m} w_i((t - y_i)_+)^{n-1}\right), \quad t \in [\alpha, \beta]. \tag{20}$$

THEOREM 10. *Let $\phi : [\alpha,\beta] \to \mathbb{R}$ be such that $\phi^{(n)}$ is absolutely continuous for some $n \geqslant 1$ with $(.-\alpha)(\beta-.)[\phi^{(n+1)}]^2 \in L[\alpha,\beta]$ and let $\mathbf{w} = (w_1,...,w_m)$, $\mathbf{x} = (x_1,...,x_m)$ and $\mathbf{y} = (y_1,...,y_m)$ be m-tuples such that $x_i, y_i \in [\alpha,\beta]$, $w_i \in \mathbb{R}$ $(i = 1,...,m)$ and let the functions $\mathfrak{R}$, $\mathfrak{B}$ be defined by (19), (20) respectively. Then*

(i) the remainder $\mathfrak{K}_n^1(\alpha,\beta;\phi)$ given in the following identity

$$\begin{aligned}
&\sum_{i=1}^{m} w_i\phi(x_i) - \sum_{i=1}^{m} w_i\phi(y_i) \\
&= \sum_{k=1}^{n-1} \frac{\phi^{(k)}(\alpha)}{k!}\left(\sum_{i=1}^{m} w_i(x_i-\alpha)^k - \sum_{i=1}^{m} w_i(y_i-\alpha)^k\right) \\
&\quad + \frac{\phi^{(n-1)}(\beta)-\phi^{(n-1)}(\alpha)}{(\beta-\alpha)(n-1)!}\int_\alpha^\beta \mathfrak{R}(t)dt + \mathfrak{K}_n^1(\alpha,\beta;\phi),
\end{aligned} \tag{21}$$

satisfies the estimation

$$|\mathfrak{K}_n^1(\alpha,\beta;\phi)| \leqslant \frac{1}{(n-1)!}[\Delta(\mathfrak{R},\mathfrak{R})]^{\frac{1}{2}}\sqrt{\frac{\beta-\alpha}{2}}\left|\int_\alpha^\beta (t-\alpha)(\beta-t)[\phi^{(n+1)}(t)]^2dt\right|^{\frac{1}{2}}.$$

(ii) The remainder $\mathfrak{K}_n^2(\alpha,\beta;\phi)$ given in the following identity

$$\begin{aligned}
&\sum_{i=1}^{m} w_i\phi(x_i) - \sum_{i=1}^{m} w_i\phi(y_i) \\
&= \sum_{k=1}^{n-1} \frac{\phi^{(k)}(\beta)}{k!}\left(\sum_{i=1}^{m} w_i(\beta-x_i)^k - \sum_{i=1}^{m} w_i(\beta-y_i)^k\right)(-1)^k \\
&\quad + \frac{\phi^{(n-1)}(\beta)-\phi^{(n-1)}(\alpha)}{(\alpha-\beta)(n-1)!}\int_\alpha^\beta \mathfrak{B}(t)dt - \mathfrak{K}_n^2(\alpha,\beta;\phi),
\end{aligned} \tag{22}$$

satisfies the estimation

$$|\mathfrak{K}_n^2(\alpha,\beta;\phi)| \leqslant \frac{1}{(n-1)!}[\Delta(\mathfrak{B},\mathfrak{B})]^{\frac{1}{2}}\sqrt{\frac{\beta-\alpha}{2}}\left|\int_\alpha^\beta (t-\alpha)(\beta-t)[\phi^{(n+1)}(t)]^2dt\right|^{\frac{1}{2}}.$$

Proof. Applying Theorem 5 for $f \mapsto \mathfrak{R}$ and $h \mapsto \phi^{(n)}$ and employ similar method as in Theorem 16 [9]. □

The following Grüss type inequalities can be obtained by using Theorem 6

THEOREM 11. *Let $\phi : [\alpha,\beta] \to \mathbb{R}$ be such that $\phi^{(n)}$ $(n \geqslant 1)$ is absolutely continuous function and $\phi^{(n+1)} \geqslant 0$ on $[\alpha,\beta]$ and let the functions $\mathfrak{R}$, $\mathfrak{B}$ be defined by (19), (20) respectively. Then, we have*

(i) the representation (21) and the remainder $\mathfrak{K}_n^1(\alpha,\beta;\phi)$ satisfies the bound

$$|\mathfrak{K}_n^1(\alpha,\beta;\phi)| \leqslant \frac{1}{(n-1)!}||\mathfrak{R}'||_\infty\left[\frac{\phi^{(n-1)}(\beta)+\phi^{(n-1)}(\alpha)}{2} - \frac{\phi^{(n-2)}(\beta)-\phi^{(n-2)}(\alpha)}{\beta-\alpha}\right].$$

(ii) The representation (22) and the remainder $\mathfrak{K}_n^2(\alpha,\beta;\phi)$ satisfies the bound

$$|\mathfrak{K}_n^2(\alpha,\beta;\phi)| \leqslant \frac{1}{(n-1)!}||\mathfrak{B}'||_\infty \left[\frac{\phi^{(n-1)}(\beta)+\phi^{(n-1)}(\alpha)}{2} - \frac{\phi^{(n-2)}(\beta)-\phi^{(n-2)}(\alpha)}{\beta-\alpha}\right].$$

Proof. Applying Theorem 6 for $f \mapsto \mathfrak{R}$ and $h \mapsto \phi^{(n)}$ and employ similar method as in Theorem 17 [9]. □

Now we intend to give the Ostrowski type inequalities related to generalizations of majorization's inequality.

THEOREM 12. *Assume that all the assumptions of Theorem 7 hold. Moreover, assume (p,q) is a pair of conjugate exponents, that is $1 \leqslant p,q \leqslant \infty$, $1/p+1/q=1$. Let $|\phi^{(n)}|^p : [\alpha,\beta] \to \mathbb{R}$ be a R-integrable function for some $n \geqslant 1$. Then, we have:*

(i)

$$\begin{aligned}&\Bigg|\sum_{i=1}^m w_i\phi(x_i) - \sum_{i=1}^m w_i\phi(y_i)\\ &\quad -\sum_{k=1}^{n-1}\frac{\phi^{(k)}(\alpha)}{k!}\left(\sum_{i=1}^m w_i(x_i-\alpha)^k - \sum_{i=1}^m w_i(y_i-\alpha)^k\right)\Bigg|\\ &\leqslant \frac{1}{(n-1)!}||\phi^{(n)}||_p\left(\int_\alpha^\beta\left|\sum_{i=1}^m w_i((x_i-t)_+)^{n-1} - \sum_{i=1}^m w_i((y_i-t)_+)^{n-1}\right|^q dt\right)^{1/q}.\end{aligned} \tag{23}$$

(ii)

$$\begin{aligned}&\Bigg|\sum_{i=1}^m w_i\phi(x_i) - \sum_{i=1}^m w_i\phi(y_i)\\ &\quad -\sum_{k=1}^{n-1}\frac{\phi^{(k)}(\beta)}{k!}\left(\sum_{i=1}^m w_i(\beta-x_i)^k - \sum_{i=1}^m w_i(\beta-y_i)^k\right)(-1)^k\Bigg|\\ &\leqslant \frac{1}{(n-1)!}||\phi^{(n)}||_p\left(\int_\alpha^\beta\left|(-1)^{n-1}\left[\sum_{i=1}^m w_i((t-x_i)_+)^{n-1} - \sum_{i=1}^m w_i((t-y_i)_+)^{n-1}\right]\right|^q dt\right)^{1/q}.\end{aligned} \tag{24}$$

The constant on the R.H.S. of (23) and (24) are sharp for $1 < p \leqslant \infty$ and the best possible for $p=1$.

Proof. To prove above results, we employ similar method adopted in Theorem 19 [9]. □

4. Associated linear functionals and exponential convexity

In the present section we will construct some linear functionals as differences of the L. H. S and R. H. S. of some of the inequalities derived earlier. The obtained linear functionals will be used in the construction of new families of exponentially convex functions and some related results will be derived.

Some definitions and basic results regarding exponentially convex functions can be seen from [2], [7] and [14] which are used in sequel.

REMARK 1. By the virtue of Theorem 9, we define the positive linear functionals with respect to n-convex function ϕ as follows

$$\begin{aligned}\Omega_1(\phi) := &\sum_{i=1}^{m} w_i\phi(x_i) - \sum_{i=1}^{m} w_i\phi(y_i)\\ &-\sum_{k=1}^{n-1}\frac{\phi^{(k)}(\alpha)}{k!}\left(\sum_{i=1}^{m} w_i(x_i-\alpha)^k - \sum_{i=1}^{m} w_i(y_i-\alpha)^k\right) \geqslant 0,\end{aligned} \tag{25}$$

$$\begin{aligned}\Omega_2(\phi) := &\sum_{i=1}^{m} w_i\phi(x_i) - \sum_{i=1}^{m} w_i\phi(y_i)\\ &-\sum_{k=1}^{n-1}\frac{\phi^{(k)}(\beta)}{k!}\left(\sum_{i=1}^{m} w_i(\beta-x_i)^k - \sum_{i=1}^{m} w_i(\beta-y_i)^k\right)(-1)^k \geqslant 0.\end{aligned} \tag{26}$$

The Lagrange and Cauchy type mean value theorems related to defined functionals are in the following theorems.

THEOREM 13. *Let $\phi : [\alpha,\beta] \to \mathbb{R}$ be such that $\phi \in C^n[\alpha,\beta]$. If the inequalities in (14) and (16) are valid, then there exist $\xi_i \in [\alpha,\beta]$ such that*

$$\Omega_i(\phi) = \phi^{(n)}(\xi_i)\Omega_i(\varphi); \quad i = 1,2,$$

where $\varphi(x) = \frac{x^n}{n!}$ and $\Omega_i(\cdot)$ are defined in Remark 1.

Proof. Similar to the proof of Theorem 4.1 in [8] (see also [3]). □

THEOREM 14. *Let $\phi,\lambda : [\alpha,\beta] \to \mathbb{R}$ be such that $\phi,\lambda \in C^n[\alpha,\beta]$. If the inequalities in (14) and (16) are valid, then there exist $\xi_i \in [\alpha,\beta]$ such that*

$$\frac{\Omega_i(\phi)}{\Omega_i(\lambda)} = \frac{\phi^{(n)}(\xi_i)}{\lambda^{(n)}(\xi_i)}; \quad i = 1,2,$$

provided that the denominators are non-zero and $\Omega_i(\cdot)$ are defined in Remark 1.

Proof. Similar to the proof of Corollary 4.2 in [8] (see also [3]). □

Theorem 14 enables us to define Cauchy means, because if

$$\xi_i = \left(\frac{\phi^{(n)}}{\lambda^{(n)}}\right)^{-1}\left(\frac{\Omega_i(\phi)}{\Omega_i(\lambda)}\right),$$

which show that ξ_i $(i=1,2)$ are means of α, β for given functions ϕ and λ.

Next we construct the non trivial examples of $n-$exponentially and exponentially convex functions from positive linear functionals $\Omega_i(\cdot)$ $(i=1,2)$. We use the idea given in [14].

THEOREM 15. *Let $\Theta=\{\phi_t : t\in J\}$, where J is an interval in $\mathbb{R}$, be a family of functions defined on an interval I in $\mathbb{R}$ such that the function $t\mapsto[x_0,\dots,x_n;\phi_t]$ is $n-$exponentially convex in the Jensen sense on J for every $(n+1)$ mutually different points $x_0,\dots,x_n\in I$. Then for the linear functionals $\Omega_i(\cdot)$ $(i=1,2)$ as defined in Remark 1, the following statements are valid for each $i=1,2$:*

(i) The function $t\to\Omega_i(\phi_t)$ is $n-$exponentially convex in the Jensen sense on J and the matrix $[\Omega_i(\phi_{\frac{t_j+t_l}{2}})]_{j,l=1}^m$ is a positive semi-definite for all $m\in\mathbb{N}, m\leqslant n$, $t_1,..,t_m\in J$. Particularly,

$$\det[\Omega_i(\phi_{\frac{t_j+t_l}{2}})]_{j,l=1}^m \geqslant 0$$

for all $m\in\mathbb{N}$, $m=1,2,\dots,n$.

(ii) If the function $t\to\Omega_i(\phi_t)$ is continuous on J, then it is $n-$exponentially convex on J.

Proof. Similar to the proof of Theorem 23 [9]. □

The following corollary is an immediate consequence of the above theorem.

COROLLARY 2. *Let $\Theta=\{\phi_t : t\in J\}$, where J is an interval in $\mathbb{R}$, be a family of functions defined on an interval I in $\mathbb{R}$, such that the function $t\mapsto[x_0,\dots,x_n;\phi_t]$ is exponentially convex in the Jensen sense on J for every $(n+1)$ mutually different points $x_0,\dots,x_n\in I$. Then for the linear functional $\Omega_i(\cdot)$ $(i=1,2)$, the following statements hold:*

(i) The function $t\to\Omega_i(\phi_t)$ is exponentially convex in the Jensen sense on J and the matrix $[\Omega_i(\phi_{\frac{t_j+t_l}{2}})]_{j,l=1}^m$ is a positive semi-definite for all $m\in\mathbb{N}, m\leqslant n$, $t_1,..,t_m\in J$. Particularly,

$$\det[\Omega_i(\phi_{\frac{t_j+t_l}{2}})]_{j,l=1}^m \geqslant 0$$

for all $m\in\mathbb{N}$, $m=1,2,\dots,n$.

(ii) If the function $t \to \Omega_i(\phi_t)$ is continuous on J, then it is exponentially convex on J.

COROLLARY 3. *Let $\Theta = \{\phi_t : t \in J\}$, where J is an interval in $\mathbb{R}$, be a family of functions defined on an interval I in $\mathbb{R}$, such that the function $t \mapsto [x_0, \ldots, x_n; \phi_t]$ is $2-$exponentially convex in the Jensen sense on J for every $(n+1)$ mutually different points $x_0, \ldots, x_n \in I$. Let $\Omega_i(\cdot)$ $(i = 1,2)$ be linear functionals. Then the following statements hold:*

(i) If the function $t \mapsto \Omega_i(\phi_t)$ is continuous on J, then it is $2-$exponentially convex function on J. If $t \mapsto \Omega_i(\phi_t)$ is additionally strictly positive, then it is also log-convex on J. Furthermore, the following inequality holds true:

$$[\Omega_i(\phi_s)]^{t-r} \leqslant [\Omega_i(\phi_r)]^{t-s} [\Omega_i(\phi_t)]^{s-r},$$

for every choice $r,s,t \in J$, such that $r < s < t$.

(ii) If the function $t \mapsto \Omega_i(\phi_t)$ is strictly positive and differentiable on J, then for every $p,q,u,v \in J$, such that $p \leqslant u$ and $q \leqslant v$, we have

$$\mu_{p,q}(\Omega_i, \Theta) \leqslant \mu_{u,v}(\Omega_i, \Theta), \tag{27}$$

where

$$\mu_{p,q}(\Omega_i, \Theta) = \begin{cases} \left(\frac{\Omega_i(\phi_p)}{\Omega_i(\phi_q)}\right)^{\frac{1}{p-q}}, & p \neq q, \\ \exp\left(\frac{\frac{d}{dp}\Omega_i(\phi_p)}{\Omega_i(\phi_p)}\right), & p = q, \end{cases} \tag{28}$$

for $\phi_p, \phi_q \in \Theta$.

Proof. Similar to the proof of Corollary 2 [9]. □

5. Applications to Cauchy means

In the running section, we use a family of functions which fulfil the conditions of Theorem 15, Corollary 2 and Corollary 3.

EXAMPLE 1. Let us consider a family of functions

$$\Theta = \{\phi_t : [0,\infty) \to \mathbb{R} : t > 0\}$$

defined by

$$\phi_t(x) = \begin{cases} \frac{x^t}{t(t-1)\cdots(t-n+1)}, & t \notin \{1, \ldots, n-1\}, \\ \frac{x^j \log x}{(-1)^{n-1-j} j!(n-1-j)!}, & t = j \in \{1, \ldots, n-1\}, \end{cases}$$

with $0 \log 0 = 0$. Since $\frac{d^n \phi_t}{dx^n}(x) = x^{t-n} > 0$, the function ϕ_t is n-convex for $x > 0$ and $t \mapsto \frac{d^n \phi_t}{dx^n}(x)$ is exponentially convex by definition. Using analogous arguing as in the

proof of Theorem 15 we also have that $t \mapsto [x_0,\dots,x_n;\phi_t]$ is exponentially convex (and so exponentially convex in the Jensen sense). Now, using Corollary 2 we conclude that $t \mapsto \Omega_i(\phi_t)$ $(i=1,2)$ are exponentially convex in the Jensen sense. Hence, for this family of functions, it is easy to give explicitly $\mu_{t,q}(\Omega_i,\Theta)$ $(i=1)$ from (28),

$$\mu_{t,q}(\Omega_1,\Theta)=\begin{cases}\left(\dfrac{\sum\limits_{i=1}^{m} w_i x_i^t-\sum\limits_{i=1}^{m} w_i y_i^t}{\sum\limits_{i=1}^{m} w_i x_i^q-\sum\limits_{i=1}^{m} w_i y_i^q}\times\dfrac{t(t-1)\cdots(t-n+1)}{q(q-1)\cdots(q-n+1)}\right)^{\frac{1}{t-q}}, & t\neq q,\\ \exp\left(\dfrac{\sum\limits_{i=1}^{m} w_i x_i^t\log x_i-\sum\limits_{i=1}^{m} w_i y_i^t\log y_i}{\sum\limits_{i=1}^{m} w_i x_i^t-\sum\limits_{i=1}^{m} w_i y_i^t}+\sum\limits_{k=0}^{n-1}\dfrac{1}{k-t}\right), & t=q\notin\{1,\dots,n-1\},\\ \exp\left(\dfrac{\sum\limits_{i=1}^{m} w_i x_i^t\log^2 x_i-\sum\limits_{i=1}^{m} w_i y_i^t\log^2 y_i}{2\left(\sum\limits_{i=1}^{m} w_i x_i^t\log x_i-\sum\limits_{i=1}^{m} w_i y_i^t\log y_i\right)}+\sum\limits_{\substack{k=0\\ k\neq t}}^{n-1}\dfrac{1}{k-t}\right), & t=q\in\{1,\dots,n-1\}.\end{cases}$$

Similarly, one can give $\mu_{t,q}(\Omega_i,\Theta)$ $(i=2)$ from (28). Now using Theorem 14 we conclude that

$$\alpha\leqslant\left(\frac{\Omega_i(\phi_t)}{\Omega_i(\phi_q)}\right)^{\frac{1}{t-q}}\leqslant\beta,\quad i=1,2.$$

Hence $\mu_{t,q}(\Omega_i,\Theta)$ $(i=1,2)$ are means and their monotonicity is followed by (27).

We conclude the paper with the following remarks:

REMARK 2. One can also consider families of functions given in the last section of [4] to construct a large families of functions which are exponentially convex and new monotonic means.

REMARK 3. All the results given above can also be given in integral versions using Theorem 8.

Acknowledgements. The research of 1st author has been fully supported by H. E. C. Pakistan. The research of 3rd author has been fully supported by Croatian Science Foundation under the project 5435.

REFERENCES

[1] N. S. BARNETT, P. CERONE AND S. S. DRAGOMIR *Majorisation inequalities for Stieltjes integrals*, Appl. Math. Lett. **22** (2009), 416–421.
[2] S. N. BERNSTEIN, *Sur les fonctions absolument monotones*, Acta Math. **52** (1929), 1–66.
[3] S. I. BUTT AND J. PEČARIĆ, *Generalized Hermite-Hadamard's Inequality*, Proc. A. Razmadze Math. Inst. **163** (2013), 9–27.
[4] S. I. BUTT, K. A. KHAN AND J. PEČARIĆ, *Popoviciu type inequalities Via Green function and generalized Montgomery identity*, Math. Inequal. Appl. **18** (4) (2015), 1519–1538.
[5] P. CERONE AND S. S. DRAGOMIR, *Some new Ostrowski-type bounds for the Čebyšev functional and applications*, J. Math. Inequal. **8** (1) (2014), 159–170.

[6] L. FUCHS, *A new proof of an inequality of Hardy-Littlewood-Polya*, Mat. Tidsskr. **B** (1947), 53–54.
[7] J. JAKŠETIC AND J. PEČARIĆ, *Exponential Convexity Method*, J. Convex Anal. **20** (1) (2013), 181–197.
[8] J. JAKŠETIĆ, J. PEČARIĆ AND A. PERUŠIĆ, *Steffensen inequality, higher order convexity and exponential convexity*, Rend. Circ. Mat. Palermo. **63** (1) (2014), 109–127.
[9] M. ADIL KHAN, NAVEED LATIF AND J. PEČARIĆ, *Generalization of majorization theorem*, J. Math. Inequal. **9** (3) (2015), 847–872.
[10] N. LATIF, J. PEČARIĆ AND I. PERIĆ, *On Majorization, Favard and Berwald's Inequalities*, Ann. Funct. Anal. **2** (2011), 31–50.
[11] A. W. MARSHALL, I. OLKIN AND BARRY C. ARNOLD, *Inequalities: Theory of Majorization and Its Applications* (Second Edition), Springer Series in Statistics, New York (2011).
[12] L. MALIGRANDA, J. PEČARIĆ AND L. E. PERSSON, *Weighted Favard's and Berwald's Inequalities*, J. Math. Anal. Appl. **190** (1995), 248–262.
[13] J. PEČARIĆ, *On some inequalities for functions with nondecrasing increments*, J. Math. Anal. Appl. **98** (1984), 188–197.
[14] J. PEČARIĆ AND J. PERIĆ, *Improvement of the Giaccardi and the Petrović Inequality and Related Stolarsky Type Means*, An. Univ. Craiova Ser. Mat. Inform. **39** (1) (2012), 65–75.
[15] J. PEČARIĆ, F. PROSCHAN AND Y. L. TONG, *Convex functions, Partial Orderings and Statistical Applications*, Academic Press, New York, (1992).

(Received March 14, 2016)

Saad Ihsan Butt
Department of Mathematics, COMSATS
Institute of Information Technology
Lahore, Pakistan
e-mail: saadihsanbutt@gmail.com

Ljiljanka Kvesić
Faculty of Science and Education, University of Mostar
Matice hrvatske bb, 88000 Mostar, Bosnia and Herzegovina
e-mail: ljkvesic@gmail.com

Josip Pečarić
Faculty of Textile Technology, University of Zagreb
10000 Zagreb, Croatia
e-mail: pecaric@mahazu.hazu.hr

Mathematical Inequalities & Applications
www.ele-math.com
mia@ele-math.com

Mathematical
Inequalities
& Applications
Volume 19, Number 4 (2016), 1271–1285 doi:10.7153/mia-19-93

CONVERSES OF JESSEN'S INEQUALITY ON TIME SCALES II

J. BARIĆ, R. JAKŠIĆ AND J. PEČARIĆ

(*Communicated by C. P. Niculescu*)

Abstract. We obtain new refinements of converse Jessen's inequality with respect to the multiple Lebesgue delta integral. The applicability of our results is illustrated in refinements of converse inequalities regarding monotonicity properties of generalized means, power means and some refinements of converse Hölder's inequality, which are all proved in the time scale setting.

1. Introduction

1.1. On time scale calculus

The theory of time scales was introduced by Stefan Hilger in his PhD thesis [13] in 1988 as a unification of the theory of difference equations with that of differential equations, unifying integral and differential calculus with the calculus of finite differences, extending to cases "in between" and offering a formalism for studying hybrid discrete-continuous dynamic systems. It has applications in any field that requires simultaneous modelling of discrete and continuous time. Now, we briefly introduce the time scales calculus and refer to [1, 14, 15] and the books [6, 19] for further details.

By a time scale $\mathbb{T}$ we mean any closed subset of $\mathbb{R}$. The two most popular examples of time scales are the real numbers $\mathbb{R}$ and the integers $\mathbb{Z}$. Since the time scale $\mathbb{T}$ may or may not be connected, we need the concept of jump operators.

For $t \in \mathbb{T}$, we define the *forward jump operator* $\sigma : \mathbb{T} \to \mathbb{T}$ by

$$\sigma(t) = \inf\{s \in \mathbb{T} : s > t\}$$

and the *backward jump operator* by

$$\rho(t) = \sup\{s \in \mathbb{T} : s < t\}.$$

In this definition, the convention is $\inf \emptyset = \sup \mathbb{T}$ (i.e., $\sigma(t) = t$ if $\mathbb{T}$ has a maximum t) and $\sup \emptyset = \inf \mathbb{T}$ (i.e., $\rho(t) = t$ if $\mathbb{T}$ has a minimum t). If $\sigma(t) > t$, then we say that t is *right-scattered*, and if $\rho(t) < t$, then we say that t is *left-scattered*. Points that are right-scattered and left-scattered at the same time are called *isolated*. Also, if $\sigma(t) = t$, then t is said to be *right-dense*, and if $\rho(t) = t$, then t is said to be *left-dense*.

Mathematics subject classification (2010): 26D15, 34A40, 34N05.
Keywords and phrases: Time scale, linear functional, Jessen's inequality, converses, means, Hölder's inequality.

Paper MIA-19-93

Points that are simultaneously right-dense and left-dense are called *dense*. The mapping $\mu : \mathbb{T} \to [0,\infty)$ defined by

$$\mu(t) = \sigma(t) - t$$

is called the *graininess function*. If $\mathbb{T}$ has a left-scattered maximum M, then we denote $\mathbb{T}^\kappa = \mathbb{T} \setminus \{M\}$; otherwise $\mathbb{T}^\kappa = \mathbb{T}$. If $f : \mathbb{T} \to \mathbb{R}$ is a function, then we define the function $f^\sigma : \mathbb{T} \to \mathbb{R}$ by

$$f^\sigma(t) = f(\sigma(t)) \quad \text{for all} \quad t \in \mathbb{T}.$$

In the following considerations, $\mathbb{T}$ will denote a time scale, $I_\mathbb{T} = I \cap \mathbb{T}$ will denote a time scale interval (for any open or closed interval I in $\mathbb{R}$), and $[0,\infty)_\mathbb{T}$ will be used for the time scale interval $[0,\infty) \cap \mathbb{T}$.

DEFINITION 1. Assume $f : \mathbb{T} \to \mathbb{R}$ is a function and let $t \in \mathbb{T}^\kappa$. Then we define $f^\Delta(t)$ to be the number (provided it exists) with the property that given any $\varepsilon > 0$, there is a neighborhood U of t such that

$$\left| f(\sigma(t)) - f(s) - f^\Delta(t)(\sigma(t) - s) \right| \leqslant \varepsilon \, |\sigma(t) - s| \quad \text{for all} \quad s \in U_\mathbb{T}.$$

We call $f^\Delta(t)$ the *delta derivative* of f at t. We say that f is *delta differentiable* on $\mathbb{T}^\kappa$ provided $f^\Delta(t)$ exists for all $t \in \mathbb{T}^\kappa$.

For all $t \in \mathbb{T}^\kappa$, we have the following properties:

(i) If f is delta differentiable at t, then f is continuous at t.

(ii) If f is continuous at t and t is right-scattered, then f is delta differentiable at t with $f^\Delta(t) = \frac{f(\sigma(t)) - f(t)}{\mu(t)}$.

(iii) If t is right-dense, then f is delta differentiable at t iff the limit $\lim\limits_{s \to t} \frac{f(t) - f(s)}{t - s}$ exists as a finite number. In this case, $f^\Delta(t) = \lim\limits_{s \to t} \frac{f(t) - f(s)}{t - s}$.

(iv) If f is delta differentiable at t, then $f(\sigma(t)) = f(t) + \mu(t) f^\Delta(t)$.

DEFINITION 2. A function $f : \mathbb{T} \to \mathbb{R}$ is called *rd-continuous* if it is continuous at all right-dense points in $\mathbb{T}$ and its left-sided limits are finite at all left-dense points in $\mathbb{T}$. We denote by C_{rd} the set of all rd-continuous functions. We say that f is rd-continuously delta differentiable (and write $f \in \mathrm{C}^1_{\mathrm{rd}}$) if $f^\Delta(t)$ exists for all $t \in \mathbb{T}^\kappa$ and $f^\Delta \in \mathrm{C}_{\mathrm{rd}}$.

DEFINITION 3. A function $F : \mathbb{T} \to \mathbb{R}$ is called a *delta antiderivative* of $f : \mathbb{T} \to \mathbb{R}$ if $F^\Delta(t) = f(t)$ for all $t \in \mathbb{T}^\kappa$. Then we define the *delta integral* by

$$\int_a^t f(s) \Delta s = F(t) - F(a).$$

The importance of rd-continuous function is revealed by the following result.

THEOREM 1. *Every rd-continuous function has a delta antiderivative.*

Now we give some properties of the delta integral.

THEOREM 2. *If $a,b,c \in \mathbb{T}$, $\alpha \in \mathbb{R}$ and $f,g \in \mathrm{C_{rd}}$, then*

(i) $\int_a^b (f(t)+g(t))\Delta t = \int_a^b f(t)\Delta t + \int_a^b g(t)\Delta t$;

(ii) $\int_a^b \alpha f(t)\Delta t = \alpha \int_a^b f(t)\Delta t$;

(iii) $\int_a^b f(t)\Delta t = -\int_b^a f(t)\Delta t$;

(iv) $\int_a^b f(t)\Delta t = \int_a^c f(t)\Delta t + \int_c^b f(t)\Delta t$;

(v) $\int_a^a f(t)\Delta t = 0$;

(vi) if $f(t) \geqslant 0$ for all t, then $\int_a^b f(t)\Delta t \geqslant 0$.

1.2. On positive linear functionals and time scale integrals

First we recall the following definition from [22].

DEFINITION 4. Let E be a nonempty set and L be a linear class of real-valued functions $f : E \to \mathbb{R}$ having the following properties.

(L_1) If $f,g \in L$ and $\alpha,\beta \in \mathbb{R}$, then $(\alpha f + \beta g) \in L$.

(L_2) If $f(t) = 1$ for all $t \in E$, then $f \in L$.

A positive linear functional is a functional $A : L \to \mathbb{R}$ having the following properties.

(A_1) If $f,g \in L$ and $\alpha,\beta \in \mathbb{R}$, then $A(\alpha f + \beta g) = \alpha A(f) + \beta A(g)$.

(A_2) If $f \in L$ and $f(t) \geqslant 0$ for all $t \in E$, then $A(f) \geqslant 0$.

In [2, 3, 4, 10], the authors presented a series of inequalities for the time scale integral and showed that it is not necessary to prove that kind of inequalities "from scratch" in the time scale setting as they can be obtained easily from well-known inequalities for positive linear functionals since the time scale integral is in fact a positive linear functional. Consequently, the results on classical inequalities, whose generalizations for the positive linear functionals are given in the monograph [22], could be used for obtaining new inequalities for the time scale integral.

Now we quote three theorems from [2] that we need in our research.

THEOREM 3. *Let $\mathbb{T}$ be a time scale. For $a,b \in \mathbb{T}$ with $a<b$, let*

$$E=[a,b)\cap\mathbb{T} \quad \text{and} \quad L=\mathrm{C}_{\mathrm{rd}}(E,\mathbb{R}).$$

Then (L_1) and (L_2) are satisfied. Moreover, delta integral

$$\int_a^b f(t)\Delta t,$$

is a positive linear functional which satisfies conditions (A_1) and (A_2).

Corresponding versions of Theorem 3 for nabla and α-diamond integrals are also given in [2].

Multiple Riemann integration and multiple Lebesgue integration on time scale was introduced in [8] and [9], respectively, and both integrals are also a positive linear functionals.

THEOREM 4. *Let $\mathbb{T}_1,\dots,\mathbb{T}_n$ be time scales. For $a_i,b_i \in \mathbb{T}_i$ with $a_i<b_i$, $1\leqslant i\leqslant n$, let*

$$\mathscr{E}\subset([a_1,b_1)\cap\mathbb{T}_1)\times\cdots\times([a_n,b_n)\cap\mathbb{T}_n)$$

be Lebesgue Δ-measurable and let L be the set of all Δ-measurable functions from $\mathscr{E}$ to $\mathbb{R}$. Then (L_1) and (L_2) are satisfied. Moreover, multiple Lebesgue delta integral on time scales

$$\int_{\mathscr{E}} f(t)\Delta t,$$

is positive linear functional and satisfies conditions (A_1) and (A_2).

THEOREM 5. *Under the assumptions of Theorem 4, delta integral*

$$\frac{\int_{\mathscr{E}}|h(t)|f(t)\Delta t}{\int_{\mathscr{E}}|h(t)|\Delta t},$$

where $h:\mathscr{E}\to\mathbb{R}$ is Δ-integrable and $\int_{\mathscr{E}}|h(t)|\Delta t>0$, is also a positive linear functional satisfying (A_1), (A_2) and $A(1)=1$.

1.3. On Jessen and Lah–Ribarič inequalities

Using the known Jessen inequality for positive linear functionals ([22, Theorem 2.4]) and Theorem 5, M. Anwar, R. Bibi, M. Bohner and J. Pečarić proved in [2] the following generalization of Jessen's inequality on time scales.

THEOREM 6. *Assume $\phi \in C(I,\mathbb{R})$ is convex, where $I \subset \mathbb{R}$ is an interval. Let $\mathscr{E} \subset \mathbb{R}^n$ be as in Theorem 4 and suppose f is Δ-integrable on $\mathscr{E}$ such that $f(\mathscr{E}) = I$. Moreover, let $h : \mathscr{E} \to \mathbb{R}$ be Δ-integrable such that $\int_{\mathscr{E}} |h(t)|\Delta t > 0$. Then*

$$\phi\left(\frac{\int_{\mathscr{E}} |h(t)|f(t)\Delta t}{\int_{\mathscr{E}} |h(t)|\Delta t}\right) \leqslant \frac{\int_{\mathscr{E}} |h(t)|\phi(f(t))\Delta t}{\int_{\mathscr{E}} |h(t)|\Delta t}.$$

Lah and Ribarič proved in [20] the converse of Jensen's inequality for convex functions (see also [21]). Beesack and Pečarić gave in [7] the generalization of Lah–Ribarič's inequality for positive linear functionals. Applying the fact that the multiple Lebesgue delta time scale integral is a positive linear functional (Theorem 5) to Beesack–Pečarić's result from [7], the following theorem is proved in [2].

THEOREM 7. *Assume $\phi \in C(I,\mathbb{R})$ is convex, where $I = [m,M] \subset \mathbb{R}$, with $m < M$. Let $\mathscr{E} \subset \mathbb{R}^n$ be as in Theorem 4 and suppose f is Δ-integrable on $\mathscr{E}$ such that $f(\mathscr{E}) = I$. Moreover, let $h : \mathscr{E} \to \mathbb{R}$ be Δ-integrable such that $\int_{\mathscr{E}} |h(t)|\Delta t > 0$. Then*

$$\frac{\int_{\mathscr{E}} |h(t)|\phi(f(t))\Delta t}{\int_{\mathscr{E}} |h(t)|\Delta t} \leqslant \frac{M - \frac{\int_{\mathscr{E}} |h(t)|f(t)\Delta t}{\int_{\mathscr{E}} |h(t)|\Delta t}}{M-m}\phi(m) + \frac{\frac{\int_{\mathscr{E}} |h(t)|f(t)\Delta t}{\int_{\mathscr{E}} |h(t)|\Delta t} - m}{M-m}\phi(M). \tag{1}$$

Recently, in their paper [16], R. Jakšić and J. Pečarić presented new converses of the Jessen and Lah-Ribarič inequalities. Now, we quote their main result.

THEOREM 8. *Let ϕ be a continuous convex function on an interval of real numbers I and $m,M \in \mathbb{R}$, $m < M$, with $[m,M] \subset Int(I)$, where $Int(I)$ is the interior of I. Let L satisfy conditions (L_1), (L_2) on $\mathscr{E}$ and let A be any positive linear functional on L with $A(1) = 1$. If $f \in L$ satisfies the bounds*

$$-\infty < m \leqslant f(t) \leqslant M < \infty \qquad \text{for every} \qquad t \in \mathscr{E}$$

and $\phi \circ f \in L$, then

$$\begin{aligned} 0 &\leqslant A(\phi(f)) - \phi(A(f)) \\ &\leqslant (M - A(f))(A(f) - m) \sup_{t \in \langle m,M \rangle} \Psi_\phi(t;m,M) \\ &\leqslant (M - A(f))(A(f) - m)\frac{\phi'_-(M) - \phi'_+(m)}{M-m} \\ &\leqslant \frac{1}{4}(M-m)(\phi'_-(M) - \phi'_+(m)), \end{aligned} \tag{2}$$

where $\phi'_-(M) = \lim_{x \to M^-} \frac{\phi(x)-\phi(M)}{x-M}$ is a left hand derivate of ϕ at M, and $\phi'_+(M) = \lim_{x \to M^+} \frac{\phi(x)-\phi(M)}{x-M}$ is a right hand derivate of ϕ at M, $x \in I$. We also have the inequalities

$$\begin{aligned} 0 &\leqslant A(\phi(f)) - \phi(A(f)) \leqslant \frac{1}{4}(M-m)^2 \Psi_\phi(A(f);m,M) \\ &\leqslant \frac{1}{4}(M-m)(\phi'_-(M) - \phi'_+(m)), \end{aligned} \tag{3}$$

where $\Psi_\Phi(\cdot;m,M)\colon \langle m,M\rangle \to \mathbb{R}$ *is defined by*

$$\Psi_\Phi(t;m,M) = \frac{1}{M-m}\Big(\frac{\phi(M)-\phi(t)}{M-t} - \frac{\phi(t)-\phi(m)}{t-m}\Big).$$

If ϕ *is concave on* I*, then all inequalities in (2) and (3) are reversed.*

2. New results

In this section, we prove converses of Jessen's inequality on time scales which refine the results given in [5] for multiple Lebesgue delta integral. For simplicity, we introduce the following notations

$$L_\Delta(f) = \int_{\mathscr{E}} f(t)\Delta t \quad \text{and} \quad \overline{L}_\Delta(f,h) = \frac{\int_{\mathscr{E}} f(t)|h(t)|\Delta t}{\int_{\mathscr{E}} |h(t)|\Delta t},$$

where $f,h : \mathscr{E} \to \mathbb{R}$ are Δ-integrable and $\int_{\mathscr{E}} |h(t)|\Delta t > 0$.

THEOREM 9. *Let* $\phi \in C(I,\mathbb{R})$ *be convex, where* $I = [m,M] \subset \mathbb{R}$*, with* $m < M$*. Assume* $\mathscr{E} \subset \mathbb{R}^n$ *is as in Theorem 4 and suppose* f *is* Δ*-integrable on* $\mathscr{E}$ *such that* $f(\mathscr{E}) = I$*. Moreover, let* $h : \mathscr{E} \to \mathbb{R}$ *be* Δ*-integrable such that* $\int_{\mathscr{E}} |h(t)|\Delta t > 0$*. Then*

$$\begin{aligned} 0 &\leqslant \overline{L}_\Delta(\phi(f),h) - \phi\left(\overline{L}_\Delta(f,h)\right) \\ &\leqslant \left(M - \overline{L}_\Delta(f,h)\right)\left(\overline{L}_\Delta(f,h) - m\right) \sup_{t\in\langle m,M\rangle} \Psi_\phi(t;m,M) \\ &\leqslant \left(M - \overline{L}_\Delta(f,h)\right)\left(\overline{L}_\Delta(f,h) - m\right) \cdot \frac{\phi'_-(M) - \phi'_+(m)}{M-m} \\ &\leqslant \frac{1}{4}(M-m)(\phi'_-(M) - \phi'_+(m)), \end{aligned} \tag{4}$$

where $\Psi_\phi(\cdot;m,M)\colon \langle m,M\rangle \to \mathbb{R}$ *is defined by*

$$\Psi_\Phi(t;m,M) = \frac{1}{M-m}\Big(\frac{\phi(M)-\phi(t)}{M-t} - \frac{\phi(t)-\phi(m)}{t-m}\Big).$$

If ϕ *is concave on* I*, then all inequalities in (4) are reversed.*

Proof. Since ϕ is a convex function, first inequality in (4) follows from Theorem 6. From Theorem 7, we have

$$\begin{aligned} &\overline{L}_\Delta(\phi(f),h) - \phi\left(\overline{L}_\Delta(f,h)\right) \\ &\leqslant \frac{M - \overline{L}_\Delta(f,h)}{M-m}\phi(m) + \frac{\overline{L}_\Delta(f,h) - m}{M-m}\phi(M) - \phi\left(\overline{L}_\Delta(f,h)\right) \end{aligned} \tag{5}$$

$$
\begin{aligned}
&= \frac{1}{M-m}\left(M-\overline{L}_\Delta(f,h)\right)\left(\overline{L}_\Delta(f,h)-m\right)\\
&\quad\times\left(\frac{\phi(M)-\phi\left(\overline{L}_\Delta(f,h)\right)}{M-\overline{L}_\Delta(f,h)}-\frac{\phi\left(\overline{L}_\Delta(f,h)\right)-\phi(m)}{\overline{L}_\Delta(f,h)-m}\right)\\
&= \left(M-\overline{L}_\Delta(f,h)\right)\left(\overline{L}_\Delta(f,h)-m\right)\Psi_\phi\left(\overline{L}_\Delta(f,h);m,M\right)\\
&\leqslant \left(M-\overline{L}_\Delta(f,h)\right)\left(\overline{L}_\Delta(f,h)-m\right)\sup_{t\in\langle m,M\rangle}\Psi_\phi(t;m,M),
\end{aligned}
$$

which is the second inequality in (4), provided that $\overline{L}_\Delta(f,h)\neq m,M$. When $\overline{L}_\Delta(f,h)$ is equal to m or M then inequality (4) is obvious.

Since,

$$
\begin{aligned}
&\sup_{t\in\langle m,M\rangle}\Psi_\phi(t;m,M)=\frac{1}{M-m}\sup_{t\in\langle m,M\rangle}\left\{\frac{\phi(M)-\phi(t)}{M-t}-\frac{\phi(t)-\phi(m)}{t-m}\right\}\\
&\leqslant\frac{1}{M-m}\left(\sup_{t\in\langle m,M\rangle}\frac{\phi(M)-\phi(t)}{M-t}+\sup_{t\in\langle m,M\rangle}\frac{-(\phi(t)-\phi(m))}{t-m}\right)\\
&=\frac{1}{M-m}\left(\sup_{t\in\langle m,M\rangle}\frac{\phi(M)-\phi(t)}{M-t}-\inf_{t\in\langle m,M\rangle}\frac{\phi(t)-\phi(m)}{t-m}\right)=\frac{\phi'_-(M)-\phi'_+(m)}{M-m},
\end{aligned}
$$

the third inequality in (4) is true. The last inequality in (4) follows from the elementary estimate $\frac{(M-x)(x-m)}{M-m}\leqslant\frac{1}{4}(M-m)$, for every $x\in\mathbb{R}$. If the function ϕ is concave, then $-\phi$ is convex, so applying (4) to $-\phi$ gives the reversed inequalities in (4). This complete the proof. □

REMARK 1. According to (5), with the same assumptions as in Theorem 9, following inequalities are also true

$$
\begin{aligned}
0&\leqslant\overline{L}_\Delta(\phi(f),h)-\phi\left(\overline{L}_\Delta(f,h)\right)\\
&\leqslant\frac{1}{4}(M-m)^2\Psi_\phi\left(\overline{L}_\Delta(f,h);m,M\right)\\
&\leqslant\frac{1}{4}(M-m)(\phi'_-(M)-\phi'_+(m)).
\end{aligned}
$$

3. Applications

In this section we use the results from Theorem 9 to get new converse inequalities for generalized means, power means and the Hölder inequality in the time scale setting.

3.1. Generalized means

Applying classical results to the monotonicity properties of generalized means with respect to the functional A, found in [12, p. 75, Theorem 92] and [22, p. 108, Theorem 4.3], R. Jakšić and J. Pečarić proved in [16] the following converse.

THEOREM 10. *Let L satisfy (L_1), (L_2) and A satisfy (A_1), (A_2) and $A(1)=1$. Suppose $\psi,\chi : I \to \mathbb{R}$ are continuous and strictly monotone and $\phi = \chi\circ\psi^{-1}$ is convex, where $I \supset [m,M]$, $-\infty < m < M < \infty$. Then, for every $f \in L$ such that $m \leqslant f(t) \leqslant M$, $t \in [m,M]$ and $\psi(f),\chi(f) \in L$, we have*

$$\begin{aligned}
0 &\leqslant \chi(M_\chi(f,A)) - \chi(M_\psi(f,A)) \\
&\leqslant (M_\psi - A(\psi(f)))(A(\psi(f)) - m_\psi) \sup_{t\in\langle m,M\rangle} \Psi_{\chi\circ\psi^{-1}}(\psi(t);m_\psi,M_\psi) \\
&\leqslant (M_\psi - A(\psi(f)))(A(\psi(f)) - m_\psi) \frac{[\chi\circ\psi^{-1}]'_-(M_\psi) - [\chi\circ\psi^{-1}]'_+(m_\psi)}{M_\psi - m_\psi} \qquad (6)\\
&\leqslant \frac{1}{4}(M_\psi - m_\psi)([\chi\circ\psi^{-1}]'_-(M_\psi) - [\chi\circ\psi^{-1}]'_+(m_\psi)),
\end{aligned}$$

where $[m_\psi,M_\psi] = \psi([m,M])$ and $M_\psi(f,A) = \psi^{-1}(A(\psi(f)))$ is a generalized mean with respect to the operator A and function ψ. If ϕ is concave, then all inequalities in (6) are reversed.

Using the generalized mean on time scales, with respect to the multiple Lebesgue delta integral ([5]), from Theorem 9 and Theorem 10 we deduce the following result.

THEOREM 11. *Suppose $I=[m,M]$, $-\infty < m < M < \infty$, $\psi,\chi : I \to \mathbb{R}$ are continuous and strictly monotone and $\phi = \chi\circ\psi^{-1}$ is convex. Assume $\mathscr{E} \subset \mathbb{R}^n$ is as in Theorem 4 and $f,h : \mathscr{E} \to \mathbb{R}$ are Δ-integrable on $\mathscr{E}$ such that $f(\mathscr{E}) = I$ and $\int_{\mathscr{E}} |h(t)|\Delta t > 0$. Then,*

$$\begin{aligned}
0 &\leqslant \chi\left(M_\chi\left(f,\overline{L}_\Delta\right)\right) - \chi\left(M_\psi\left(f,\overline{L}_\Delta\right)\right) \\
&\leqslant \left(M_\psi - \overline{L}_\Delta(\psi(f),h)\right)\left(\overline{L}_\Delta(\psi(f),h) - m_\psi\right) \sup_{t\in\langle m,M\rangle} \Psi_{\chi\circ\psi^{-1}}(\psi(t);m_\psi,M_\psi) \\
&\leqslant \left(M_\psi - \overline{L}_\Delta(\psi(f),h)\right)\left(\overline{L}_\Delta(\psi(f),h) - m_\psi\right) \\
&\quad \times \frac{(\chi\circ\psi^{-1})'_-(M_\psi) - (\chi\circ\psi^{-1})'_+(m_\psi)}{M_\psi - m_\psi} \qquad (7)\\
&\leqslant \frac{1}{4}\left(M_\psi - m_\psi\right)\left((\chi\circ\psi^{-1})'_-(M_\psi) - (\chi\circ\psi^{-1})'_+(m_\psi)\right),
\end{aligned}$$

where $[m_\psi,M_\psi] = \psi([m,M])$. If ϕ is concave, then all inequalities in (7) are reversed.

Proof. The claim follows from Theorem 4, Theorem 9 and Theorem 10. □

3.2. Power means

The following result on power means with respect to a positive linear functional is proved in [16].

THEOREM 12. *Let L satisfy (L_1), (L_2) and A satisfy (A_1), (A_2) with $A(1)=1$. Let $0<m\leqslant f(t)\leqslant M<\infty$ for $t\in E$, $f^r, f^s, \log f\in L$ for $r,s\in\mathbb{R}$, $r<s$ and let*

$$\phi(t)=\begin{cases} t^{s/r} & : r\neq 0, s\neq 0,\\ \frac{1}{r}\log t & : r\neq 0, s=0,\\ e^{st} & : r=0, s\neq 0.\end{cases} \tag{8}$$

If $0<r<s$ or $r<0<s$, then

$$\begin{aligned} 0 &\leqslant (M^{[s]}(f,A))^s-(M^{[r]}(f,A))^s\\ &\leqslant (M^r-A(f^r))(A(f^r)-m^r)\sup_{t\in\langle m,M\rangle}\Psi_\Phi(t^r;m^r,M^r)\\ &\leqslant \frac{s}{r}(M^r-A(f^r))(A(f^r)-m^r)\frac{M^{s-r}-m^{s-r}}{M^r-m^r}\\ &\leqslant \frac{s}{4r}(M^r-m^r)(M^{s-r}-m^{s-r}). \end{aligned} \tag{9}$$

If $r<s<0$, then

$$\begin{aligned} 0 &\geqslant (M^{[s]}(f,A))^s-(M^{[r]}(f,A))^s\\ &\geqslant (M^r-A(f^r))(A(f^r)-m^r)\sup_{t\in\langle m,M\rangle}\Psi_\Phi(t^r;m^r,M^r)\\ &\geqslant \frac{s}{r}(M^r-A(f^r))(A(f^r)-m^r)\frac{M^{s-r}-m^{s-r}}{M^r-m^r}\\ &\geqslant \frac{s}{4r}(M^r-m^r)(M^{s-r}-m^{s-r}). \end{aligned} \tag{10}$$

If $s=0$ and $r<0$, then

$$\begin{aligned} 0 &\leqslant \log(M^{[0]}(f,A))-\log(M^{[r]}(f,A))\\ &\leqslant (M^r-A(f^r))(A(f^r)-m^r)\sup_{t\in\langle m,M\rangle}\Psi_\Phi(t^r;M^r,m^r)\\ &\leqslant -\frac{1}{r}\cdot\frac{(M^r-A(f^r))(A(f^r)-m^r)}{M^rm^r}\\ &\leqslant \frac{1}{4r}(m^r-M^r)\left(\frac{1}{m^r}-\frac{1}{M^r}\right). \end{aligned} \tag{11}$$

If $r=0$ and $s>0$, then

$$\begin{aligned} 0 &\leqslant (M^{[s]}(f,A))^s-(M^{[0]}(f,A))^s\\ &\leqslant (\log M-A(\log f))(A(\log f)-\log m)\sup_{t\in\langle m,M\rangle}\Psi_\Phi(\log t;\log m,\log M)\\ &\leqslant s(\log M-A(\log f))(A(\log f)-\log m)\frac{M^s-m^s}{\log M-\log m}\\ &\leqslant s(M^s-m^s)\log\frac{M}{m}. \end{aligned} \tag{12}$$

According to definition of power mean on time scales with respect of the multiple Lebesgue delta integral ([5]), from the Theorem 12 we derive the following result.

THEOREM 13. *Suppose $\mathscr{E} \subset \mathbb{R}^n$ is as in Theorem 4, f is Δ-integrable on $\mathscr{E}$ such that $f(\mathscr{E}) = I$ and $0 < m \leqslant f(t) \leqslant M < \infty$, for $t \in \mathscr{E}$, $m, M \in \mathbb{R}$. Let $h : \mathscr{E} \to \mathbb{R}$ be Δ-integrable such that $\int_{\mathscr{E}} |h(t)|\Delta t > 0$. For $r, s \in \mathbb{R}$ suppose f^r, f^s, $(\log f)$ are Δ-integrable on $\mathscr{E}$.*

(i) If $0 < r < s$ or $r < 0 < s$, then

$$\begin{aligned} 0 &\leqslant \left(M^{[s]}\left(f, \overline{L}_\Delta\right)\right)^s - \left(M^{[r]}\left(f, \overline{L}_\Delta\right)\right)^s \\ &\leqslant \left(M^r - \overline{L}_\Delta(f^r, h)\right)\left(\overline{L}_\Delta(f^r, h) - m^r\right) \sup_{t \in \langle m, M\rangle} \Psi_\phi(t^r; m^r, M^r) \\ &\leqslant \frac{s}{r}\left(M^r - \overline{L}_\Delta(f^r, h)\right)\left(\overline{L}_\Delta(f^r, h) - m^r\right) \frac{M^{s-r} - m^{s-r}}{M^r - m^r} \\ &\leqslant \frac{s}{4r}\left(M^r - m^r\right)\left(M^{s-r} - m^{s-r}\right). \end{aligned} \tag{13}$$

(ii) If $r < s < 0$, then

$$\begin{aligned} 0 &\geqslant \left(M^{[s]}\left(f, \overline{L}_\Delta\right)\right)^s - \left(M^{[r]}\left(f, \overline{L}_\Delta\right)\right)^s \\ &\geqslant \left(M^r - \overline{L}_\Delta(f^r, h)\right)\left(\overline{L}_\Delta(f^r, h) - m^r\right) \sup_{t \in \langle m, M\rangle} \Psi_\phi(t^r; m^r, M^r) \\ &\geqslant \frac{s}{r}\left(M^r - \overline{L}_\Delta(f^r, h)\right)\left(\overline{L}_\Delta(f^r, h) - m^r\right) \frac{M^{s-r} - m^{s-r}}{M^r - m^r} \\ &\geqslant \frac{s}{4r}\left(M^r - m^r\right)\left(M^{s-r} - m^{s-r}\right). \end{aligned} \tag{14}$$

(iii) If $s = 0$ and $r < 0$, then

$$\begin{aligned} 0 &\leqslant \log\left(M^{[0]}\left(f, \overline{L}_\Delta\right)\right) - \log\left(M^{[r]}\left(f, \overline{L}_\Delta\right)\right) \\ &\leqslant \left(M^r - \overline{L}_\Delta(f^r, h)\right)\left(\overline{L}_\Delta(f^r, h) - m^r\right) \sup_{t \in \langle m, M\rangle} \Psi_\phi(t^r; M^r, m^r) \\ &\leqslant -\frac{1}{r} \cdot \frac{\left(M^r - \overline{L}_\Delta(f^r, h)\right)\left(\overline{L}_\Delta(f^r, h) - m^r\right)}{M^r m^r} \\ &\leqslant -\frac{1}{4r} \cdot \frac{(M^r - m^r)^2}{M^r m^r}. \end{aligned} \tag{15}$$

(iv) If $r = 0$ and $s > 0$, then

$$\begin{aligned} 0 &\leqslant \left(M^{[s]}\left(f, \overline{L}_\Delta\right)\right)^s - \left(M^{[0]}\left(f, \overline{L}_\Delta\right)\right)^s \\ &\leqslant \left(\log M - \overline{L}_\Delta(\log f, h)\right)\left(\overline{L}_\Delta(\log f, h) - \log m\right) \\ &\quad \times \sup_{t \in \langle m, M\rangle} \Psi_\phi(\log t; \log m, \log M) \end{aligned}$$

$$\leqslant \left(\log M - \overline{L}_\Delta(\log f,h)\right)\left(\overline{L}_\Delta(\log f,h) - \log m\right)\cdot \frac{s(M^s-m^s)}{\log M - \log m} \tag{16}$$
$$\leqslant s\,(M^s-m^s)\log\frac{M}{m}.$$

Proof. The claim follows from Theorem 4, Theorem 9 and Theorem 12. □

3.3. Hölder's inequality

The following theorem gives Hölder's inequality for delta time scale integrals proved in [2].

THEOREM 14. *Assume $\mathscr{E}\subset\mathbb{R}^n$ is as in Theorem 4 and $|w||f|^p$, $|w||g|^q$, $|wfg|$ are Δ-integrable on $\mathscr{E}$, where $p>1$ and $q=p/(p-1)$. Then,*

$$\int_{\mathscr{E}} |w(t)f(t)g(t)|\Delta t \leqslant \left(\int_{\mathscr{E}} |w(t)||f(t)|^p\Delta t\right)^{\frac{1}{p}}\left(\int_{\mathscr{E}} |w(t)||g(t)|^q\Delta t\right)^{\frac{1}{q}}.$$

This inequality is reversed if $0<p<1$ and $\int_{\mathscr{E}}|w(t)||g(t)|^q\Delta t>0$, and it is also reversed if $p<0$ and $\int_{\mathscr{E}}|w(t)||f(t)|^p\Delta t>0$.

Next, we refine the converse Hölder's inequalities on time scales, proved in [5].

THEOREM 15. *Assume $\mathscr{E}\subset\mathbb{R}^n$ is as in Theorem 4 and w,f,g are real functions on $\mathscr{E}$ such that $w,f,g\geqslant 0$. For $m,M\in\mathbb{R}$ such that $-\infty<m<M<\infty$ let $m\leqslant f(t)g^q(t)\leqslant M$, $t\in\mathscr{E}$. If wf^p, wg^q, wfg are Δ-integrable on $\mathscr{E}$ and $\int_{\mathscr{E}} w(t)g^q(t)\Delta t>0$, where $p>1$ and $q=p/(p-1)$, then*

$$\begin{aligned}
0 &\leqslant \int_{\mathscr{E}} w(t)f^p(t)\Delta t\cdot\left(\int_{\mathscr{E}} w(t)g^q(t)\Delta t\right)^{\frac{p}{q}} - \left(\int_{\mathscr{E}} w(t)f(t)g(t)\Delta t\right)^p\\
&\leqslant \left(M\int_{\mathscr{E}} w(t)g^q(t)\Delta t - \int_{\mathscr{E}} w(t)f(t)g(t)\Delta t\right)\left(\int_{\mathscr{E}} w(t)f(t)g(t)\Delta t - m\int_{\mathscr{E}} w(t)g^q(t)\Delta t\right)\\
&\quad\times \sup_{t\in\langle m,M\rangle}\Psi_\phi(t;m,M)\cdot\left(\int_{\mathscr{E}} w(t)g^q(t)\Delta t\right)^{p-2} \qquad (17)\\
&\leqslant \left(M\int_{\mathscr{E}} w(t)g^q(t)\Delta t - \int_{\mathscr{E}} w(t)f(t)g(t)\Delta t\right)\left(\int_{\mathscr{E}} w(t)f(t)g(t)\Delta t - m\int_{\mathscr{E}} w(t)g^q(t)\Delta t\right)\\
&\quad\times\frac{p(M^{p-1}-m^{p-1})}{M-m}\cdot\left(\int_{\mathscr{E}} w(t)g^q(t)\Delta t\right)^{p-2}
\end{aligned}$$

$$\leqslant \frac{p}{4}(M-m)(M^{p-1}-m^{p-1})\left(\int_{\mathscr{E}} w(t)g^q(t)\Delta t\right)^p.$$

For $p<0$, inequalities (17) hold if $\int_{\mathscr{E}} w(t)f(t)g(t)\Delta t>0$, $t\in\mathscr{E}$. In case $0<p<1$, all inequalities in (17) are reversed.

Proof. Inequalities (17) follow directly from Theroem 9 by taking the function ϕ to be of the form $\phi(t)=t^p$ and replacing h by wg^q and f by $fg^{-\frac{q}{p}}$. For $p<0$ and $p>1$, the function t^p is convex and inequalities (17) follow from inequalities (4). For $0<p<1$, the function t^p is concave and, according to Theorem 9, all inequalities in (17) will be reversed. □

THEOREM 16. *Assume $\mathscr{E}\subset\mathbb{R}^n$ is as in Theorem 4 and $f,g\geqslant 0$ such that f^p, g^q, fg are Δ-integrable on $\mathscr{E}$ and $\int_{\mathscr{E}} g^q(t)\Delta t>0$, where $0<p<1$ and $q=p/(p-1)$. For $m,M\in\mathbb{R}$ such that $-\infty<m<M<\infty$, let $m\leqslant f(t)g^{-q}(t)\leqslant M$, $t\in\mathscr{E}$. Then,*

$$\begin{aligned}
0 &\leqslant \int_{\mathscr{E}} f(t)g(t)\Delta t-\left(\int_{\mathscr{E}} f^p(t)\Delta t\right)^{\frac{1}{p}}\left(\int_{\mathscr{E}} g^q(t)\Delta t\right)^{\frac{1}{q}}\\
&\leqslant \frac{1}{\int_{\mathscr{E}} g^q(t)\Delta t}\left(M\int_{\mathscr{E}} g^q(t)\Delta t-\int_{\mathscr{E}} f^p(t)\Delta t\right)\cdot\left(\int_{\mathscr{E}} f^p(t)\Delta t-m\int_{\mathscr{E}} g^q(t)\Delta t\right)\\
&\quad\times\sup_{t\in\langle m,M\rangle}\Psi_\phi(t;m,M) \qquad (18)\\
&\leqslant \frac{1}{p}\cdot\frac{M^{-\frac{1}{q}}-m^{-\frac{1}{q}}}{M-m}\cdot\frac{1}{\int_{\mathscr{E}} g^q(t)\Delta t}\left(M\int_{\mathscr{E}} g^q(t)\Delta t-\int_{\mathscr{E}} f^p(t)\Delta t\right)\\
&\quad\times\left(\int_{\mathscr{E}} f^p(t)\Delta t-m\int_{\mathscr{E}} g^q(t)\Delta t\right)\\
&\leqslant \frac{1}{4p}(M-m)\left(M^{-\frac{1}{q}}-m^{-\frac{1}{q}}\right)\int_{\mathscr{E}} g^q(t)\Delta t.
\end{aligned}$$

For $p<0$, inequalities (18) hold if $\int_{\mathscr{E}} f^p(t)\Delta t>0$, $t\in\mathscr{E}$. In case $p>1$, all inequalities in (18) are reversed.

Proof. Inequalities (18) follow directly from Theroem 9 by taking the function ϕ to be of the form $\phi(t)=t^{\frac{1}{p}}$ and replacing h by g^q and f by $\frac{f^p}{g^q}$. Namely, when $p<1$, the function $t^{\frac{1}{p}}$ is convex and inequalities (18) follow from inequalities (4). For $p>1$, the function t^p is concave and, according to Theorem 9, all inequalities in (18) will be reversed. □

THEOREM 17. *Assume $\mathscr{E} \subset \mathbb{R}^n$ is as in Theorem 4 and $f, g \geqslant 0$ such that g^q, fg are Δ-integrable on $\mathscr{E}$ and $\int_{\mathscr{E}} g^q(t)\Delta t > 0$, where $p < 0$ or $p > 1$ and $q = p/(p-1)$. Let $m, M \in \mathbb{R}$ such that $-\infty < m < M < \infty$ and $m \leqslant f(t)g^{1-q}(t) \leqslant M$, $t \in \mathscr{E}$. Then,*

$$
\begin{aligned}
0 &\leqslant \int_{\mathscr{E}} f^p(t)\Delta t \cdot \left(\int_{\mathscr{E}} g^q(t)\Delta t\right)^{\frac{p}{q}} - \left(\int_{\mathscr{E}} f(t)g(t)\Delta t\right)^p \\
&\leqslant \left(M\int_{\mathscr{E}} g^q(t)\Delta t - \int_{\mathscr{E}} f(t)g(t)\Delta t\right)\left(\int_{\mathscr{E}} f(t)g(t)\Delta t - m\int_{\mathscr{E}} g^q(t)\Delta t\right) \\
&\quad \times \left(\int_{\mathscr{E}} g^q(t)\Delta t\right)^{p-2} \sup_{t\in\langle m,M\rangle} \Psi_\phi(t;m,M) \qquad (19)\\
&\leqslant \left(M\int_{\mathscr{E}} g^q(t)\Delta t - \int_{\mathscr{E}} f(t)g(t)\Delta t\right)\left(\int_{\mathscr{E}} f(t)g(t)\Delta t - m\int_{\mathscr{E}} g^q(t)\Delta t\right) \\
&\quad \times \frac{p(M^{p-1}-m^{p-1})}{M-m} \cdot \left(\int_{\mathscr{E}} g^q(t)\Delta t\right)^{p-2} \\
&\leqslant \frac{p}{4}(M-m)(M^{p-1}-m^{p-1})\left(\int_{\mathscr{E}} g^q(t)\Delta t\right)^p.
\end{aligned}
$$

In case $0 < p < 1$, all inequalities in (19) are reversed.

Proof. Inequalities (19) follow directly from Theroem 9 by taking the function ϕ to be of the form $\phi(t) = t^p$ and replacing h by g^q and f by fg^{1-q}. Namely, for $p < 0$ or $p > 1$, the function t^p is convex and inequalities (19) follow from inequalities (4). For $0 < p < 1$, the function t^p is concave and, according to Theorem 9, all inequalities in (19) will be reversed. □

3.4. Additional improvements

Recently, R. Jakšić and J. E. Pečarić proved in [17] new refinement of the converse Jensen inequality for normalized positive linear functionals, given in Theorem 8. Using that result, we derive the following theorem which refines inequality (4) from Theorem 9.

THEOREM 18. *Let $\phi \in C(I,\mathbb{R})$ be convex, where $I = [m,M] \subset \mathbb{R}$, with $m < M$. Assume $\mathscr{E} \subset \mathbb{R}^n$ and L are as in Theorem 4 with additional property that for every $f, g \in L$ we have that $\min\{f,g\} \in L$ and $\max\{f,g\} \in L$. Let f be Δ-integrable on $\mathscr{E}$ such that $f(\mathscr{E}) = I$. Moreover, let $h : \mathscr{E} \to \mathbb{R}$ be Δ-integrable such that $\int_{\mathscr{E}} |h(t)|\Delta t > 0$.*

Then,

$$\begin{aligned}
0 &\leqslant \overline{L}_\Delta(\phi(f),h) - \phi\left(\overline{L}_\Delta(f,h)\right) \\
&\leqslant \left(M - \overline{L}_\Delta(f,h)\right)\left(\overline{L}_\Delta(f,h) - m\right) \sup_{t\in\langle m,M\rangle} \Psi_\phi(t;m,M) - \overline{L}_\Delta(\tilde{f},h)\delta_\phi \\
&\leqslant \left(M - \overline{L}_\Delta(f,h)\right)\left(\overline{L}_\Delta(f,h) - m\right)\cdot \frac{\phi'_-(M) - \phi'_+(m)}{M-m} - \overline{L}_\Delta(\tilde{f},h)\delta_\phi \qquad (20) \\
&\leqslant \frac{1}{4}(M-m)(\phi'_-(M) - \phi'_+(m)) - \overline{L}_\Delta(\tilde{f},h)\delta_\phi,
\end{aligned}$$

where

$$\tilde{f} = \tfrac{1}{2} - \tfrac{|f - \frac{m+M}{2}|}{M-m}, \quad \delta_\phi = \phi(m) + \phi(M) - 2\phi\left(\tfrac{m+M}{2}\right)$$

and $\Psi_\phi(\cdot;m,M)\colon \langle m,M\rangle \to \mathbb{R}$ *is defined by*

$$\Psi_\Phi(t;m,M) = \tfrac{1}{M-m}\left(\tfrac{\phi(M)-\phi(t)}{M-t} - \tfrac{\phi(t)-\phi(m)}{t-m}\right).$$

If ϕ *is concave on* I*, then the above inequalities are reversed.*

Proof. Inequality (20) follows directly from the main result of [17] and the fact that multiple Lebesgue delta integral is a positive linear functional. □

REMARK 2. Using the resoning shown in Theorem 18, the refinements of all inequalities proved in this paper in Theorem 10, Theorem 11, Theorem 12 and Theorem 13 can be obtained.

Acknowledgement. This work has been fully supported by Croatian Science Foundation under the project 5435.

REFERENCES

[1] R. P. AGARWAL, M. BOHNER AND A. PETERSON, *Inequalities on time scale: a survey*, Math. Inequal. Appl. **4**, 4 (2001), 535–557.

[2] M. ANWAR, R. BIBI, M. BOHNER AND J. PEČARIĆ, *Integral inequalities on time scales via the theory of positive linear functionals*, Abstract and Applied Analysis **2011**, (2011).

[3] R. BIBI, M. BOHNER AND J. PEČARIĆ, *Cauchy-type means and exponential and logaritheoremic convexity for superquadratic functions on time scales*, Ann. Funct. Anal. **6**, 1 (2015), 59–83.

[4] J. BARIĆ, R. BIBI, M. BOHNER AND J. PEČARIĆ, *Time scales integral inequalities for superquadratic functions*, J. Korean Math. Soc. **50**, 3 (2013), 465–477.

[5] J. BARIĆ, M. BOHNER, R. JAKŠIĆ AND J. E. PEČARIĆ, *Converses of Jessen's inequality on time scales*, Mathematical Notes **98**, 1 (2015), 11–24.

[6] M. BOHNER AND A. PETERSON, *Dynamic Equations on Time Scales*, Biremarkhäuser, Boston, Basel, Berlin, 2001.

[7] P. R. BEESACK AND J. E. PEČARIĆ, *On Jessen's inequality for convex functions*, J. Math. Anal. Appl. **110**, 2 (1985), 536–552.

[8] M. BOHNER AND G. SH. GUSEINOV, *Multiple integration on time scales*, Dynamic Systems and Applications **14**, 3–4 (2005), 579–606.

[9] M. BOHNER AND G. SH. GUSEINOV, *Multiple Lebesgue integration on time scales*, Advances in Difference Equations **2006**, Article ID 26391, (2006), 13 pages.
[10] M. BOHNER, A. NOSHEEN, J. PEČARIĆ AND A. YOUNUS, *Some dynamic Hardy-type inequalities with general kernel*, J. Math. Inequal. **8**, 1 (2014), 185–199.
[11] S. S. DRAGOMIR, *Bounds for the deviation of a function from the chord generated by its extremities*, Bull. Aust. Math. Soc. **78**, 2 (2008), 225–248.
[12] G. H. HARDY, J. E. LITTLEWOOD, G. POLYA, *Inequalities 1st ed. and 2nd ed. Cambridge University Press*, Cambridge, England, (1934, 1952).
[13] S. HILGER, *Ein Maßkettenkalkül mit Anwendung auf Zentrumsmannigfaltigkeiten*, Phd. D. thesis, Universität Würzburg, 1988.
[14] S. HILGER, *Analysis on measure chains -a unified approach to continuous and discrete calculus*, Results Math. **18**, 1–2 (1990), 18–56.
[15] S. HILGER, *Differential and difference calculus unified*, Nonlinear Anal. **30**, 1 (1997), 143–166.
[16] R. JAKŠIĆ AND J. E. PEČARIĆ, *New converses of the Jessen and Lah-Ribarič inequalities II*, J. Math. Inequal. **7**, 4 (2013), 617–645.
[17] R. JAKŠIĆ AND J. E. PEČARIĆ, *New converses of the Jessen and Lah-Ribarič inequalities III*, submitted.
[18] M. KLARIČIĆ, J. E. PEČARIĆ, J. PERIĆ, *On the converse Jensen inequality*, Applied Mathematics and Computation **218**, (2012), 6566–6575.
[19] B. KAYMAKCALAN, V. LAKSHMIKANTHAM AND S. SIVASUNDARAM, *Dynamic Systems on Measure Chains*, Kluwer Academic Publishers, Dordrecht, (1996).
[20] P. LAH, M. RIBARIČ, *Converse of Jensen's inequality for convex functions*, Univ. Beograd. Publ. Elektrotehn. Fak. Ser. Mat. Fiz. **412–460**, (1973), 201–205.
[21] J. E. PEČARIĆ, *Konveksne funkcije: Nejednakosti*, Naučna knjiga, Beograd, (1987).
[22] J. PEČARIĆ, F. PROSCHAN AND Y. C. TONG, *Convex functions, Partial Orderings and Statistical Applications*, Academic Press, Inc. (1992).
[23] F. H. WONG, C. C. YEH AND W. C. LIAN, *An extension of Jensen's inequality on time scales*, Adv. Dyn. Syst. Appl. **1**, 1 (2006), 113–120.

(Received March 16, 2016)

J. Barić
Faculty of Electrical Engineering
Mechanical Engineering and Naval Architecture
University of Split
Rudjera Boškovića 32, 21000 Split, Croatia
e-mail: jbaric@fesb.hr

R. Jakšić
Faculty of Textile Technology, University of Zagreb
Prilaz baruna Filipovića 28a, 10000 Zagreb, Croatia
e-mail: rozarija.jaksic@ttf.hr

J. Pečarić
Faculty of Textile Technology, University of Zagreb
Prilaz baruna Filipovića 28a, 10000 Zagreb, Croatia
e-mail: pecaric@mahazu.hazu.hr

Mathematical Inequalities & Applications
www.ele-math.com
mia@ele-math.com

Mathematical
Inequalities
& Applications
Volume 19, Number 4 (2016), 1287–1293 doi:10.7153/mia-19-94

ON A PROBLEM CONNECTED WITH STRONGLY CONVEX FUNCTIONS

MIROSŁAW ADAMEK

(*Communicated by K. Nikodem*)

Abstract. In this paper we show that the result obtained by Nikodem and Páles in [3] can by extended to a more general case. In particular, for a non-negative function F defined on a real vector space we define F-strongly convex functions and show that such functions are in the form $g+F^*$, where g is a convex function and F^* is a function associated with function F, iff F^* is a quadratic function. Using this result, we get a characterization of quadratic functions.

1. Introduction

Let $(X,\|\cdot\|)$ be a real normed space, D stand for a convex subset of X and c be a positive constant. A function $f:D\to\mathbb{R}$ is called *strongly convex with modulus* c if

$$f(tx+(1-t)y)\leqslant tf(x)+(1-t)f(y)-ct(1-t)\,\|x-y\|^2, \tag{1}$$

for all $x,y\in D$ and $t\in(0,1)$.

Such functions have been introduced by Polyak in [4] and as in turns out they play an important role in optimization theory. Strongly convex functions have also been studied by many authors, among others, see [1], [5], [6]. A function $f:D\to\mathbb{R}$ is called *strongly Jensen convex with modulus* c if

$$f\Big(\frac{x+y}{2}\Big)\leqslant\frac{f(x)+f(y)}{2}-\frac{c}{4}\,\|x-y\|^2, \tag{2}$$

for all $x,y\in D$.

In [3] the authors present relations between strongly convex (strongly Jensen convex) and convex (Jensen convex) functions. In particular, they show that each strongly convex function (strongly Jensen convex function) is in the form $g+\|\cdot\|^2$, where g is a convex function (Jensen convex function) iff the space $(X,\|\cdot\|)$ is an inner product space.

Now, if in (1) and (2) we replace $c\|\cdot\|^2$, with a non-negative function F defined on X we get the following inequalities, respectively.

$$f(tx+(1-t)y)\leqslant tf(x)+(1-t)f(y)-t(1-t)F(x-y),$$

Mathematics subject classification (2010): Primary 46C15; Secondary 26B25, 39B62.
Keywords and phrases: Strongly convex function, strongly F-convex function, quadratic function.

Paper MIA-19-94

for all $x,y \in D$ and $t \in (0,1)$.

$$f\Big(\frac{x+y}{2}\Big) \leqslant \frac{f(x)+f(y)}{2} - \frac{1}{4}F(x-y),$$

for all $x,y \in D$.

The main goal of this paper is to resolve a problem of whether for such functions a similar result as Nikodem and Páles got in [3] is possible to obtain.

2. Main result

At the beginning we formally introduce two definitions of functions aforementioned in the introduction.

DEFINITION 1. Let X be a real vector space, D be a nonempty convex subset of X and $F : X \to [0,\infty)$ be a given function. A function $f : D \to \mathbb{R}$ will be called *F-strongly convex* if

$$f\big(tx+(1-t)y\big) \leqslant tf(x)+(1-t)f(y)-t(1-t)F(x-y)$$

for all $x,y \in D$ and $t \in (0,1)$.

DEFINITION 2. Let X be a real vector space, D be a nonempty convex subset of X and $F : X \to [0,\infty)$ be a given function. A function $f : D \to \mathbb{R}$ we will call *F-strongly J-convex* if

$$f\Big(\frac{x+y}{2}\Big) \leqslant \frac{f(x)+f(y)}{2} - \frac{1}{4}F(x-y)$$

for all $x,y \in D$.

Notice that in Definition 1 parameter t is arbitrary from the segment $(0,1)$. Thus, function f is F-strongly convex if and only if

$$f\big(tx+(1-t)y\big) \leqslant tf(x)+(1-t)f(y)-t(1-t)F(y-x)$$

for all $x,y \in D$ and $t \in (0,1)$. So, defining the function F^* by setting

$$F^*(x) := max\{F(-x),F(x)\}, \quad x \in X,$$

we have the following observation.

OBSERVATION 1. Let X be a real vector space, D be a nonempty convex subset of X and $F : X \to [0,\infty)$ be a given function. A function $f : D \to \mathbb{R}$ is F-strongly convex (F-strongly J-convex) if and only if a function $f : D \to \mathbb{R}$ is F^*-strongly convex (F^*-strongly J-convex).

2.1. F-strongly J-convexity

In this section we will consider F-strongly J-convex functions and we shall start with three useful lemmas.

LEMMA 1. *Let X be a real vector space, D be a nonempty convex subset of X and $F : X \to [0,\infty)$ be a given quadratic function (i.e. $F(x+y)+F(x-y) = 2F(x)+2F(y)$). A function $f : D \to \mathbb{R}$ is F-strongly J-convex if and only if the function $g = f - F$ is J-convex.*

Proof. F is a quadratic function thus

$$\frac{1}{4}F(x-y) = -F\left(\frac{x+y}{2}\right) + \frac{1}{2}F(x) + \frac{1}{2}F(y).$$

Now, the inequality

$$f\left(\frac{x+y}{2}\right) \leqslant \frac{f(x)+f(y)}{2} - \frac{1}{4}F(x-y)$$

can by written in an equivalent form

$$f\left(\frac{x+y}{2}\right) - F\left(\frac{x+y}{2}\right) \leqslant \frac{f(x)-F(x)+f(y)-F(y)}{2}.$$

Taking $g := f - F$ we get

$$g\left(\frac{x+y}{2}\right) \leqslant \frac{g(x)+g(y)}{2}. \quad \square$$

LEMMA 2. *Let X be a real vector space and $F : X \to [0,\infty)$ be a function that is even. If the function F is F-strongly J-convex, then $F(\frac{1}{2}x) = \frac{1}{4}F(x)$ far all $x \in X$.*

Proof. We are assuming the inequality

$$F\left(\frac{x+y}{2}\right) \leqslant \frac{F(x)+F(y)}{2} - \frac{1}{4}F(x-y), \quad x,y \in X. \tag{3}$$

From the above inequality with $x = y = 0$ and non-negativity of F we get $F(0) = 0$. Now, taking $y = 0$ we have

$$F\left(\frac{x}{2}\right) \leqslant \frac{1}{4}F(x), \quad x \in X.$$

Moreover, putting $y = -x$, substituting x with $\frac{x}{2}$ in (3) and using evenness of F we obtain

$$\frac{1}{4}F(x) \leqslant F\left(\frac{x}{2}\right), \quad x \in X.$$

Thus

$$F\left(\frac{x}{2}\right) = \frac{1}{4}F(x), \quad x \in X. \tag{4}$$

$\square$

LEMMA 3. *Let X be a real vector space and $F : X \to [0,\infty)$ be a function that is even. The function F is F-strongly J-convex if and only if F is a quadratic function.*

Proof. Suppose that F is F-strongly J-convex. From Definition 2 and Lemma 2 we get

$$F(x+y)+F(x-y) \leqslant 2F(x)+2F(y), \quad x,y \in X.$$

Now, putting $x+y=u$ and $x-y=v$ in the above inequality a using once more Lemma 2 we obtain

$$F(u+v)+F(u-v) \geqslant 2F(u)+2F(v), \quad u,v \in X.$$

Thus

$$F(x+y)+F(x-y) = 2F(x)+2F(y), \quad x,y \in X.$$

The reverse implication is obviously true. □

The next result gives the solution of the problem aforementioned in case of F-strongly J-convexity. Moreover, we obtain a characterization of quadratic functions.

THEOREM 1. *Let X be a real vector space, D be a nonempty convex subset of X and $F : X \to [0,\infty)$ be a given function. The following conditions are equivalent:*

1. *For all function $f : D \to \mathbb{R}$, f is F-strongly J-convex if and only if the function $g = f - F^*$ is J-convex;*
2. *The function F^* is F^*-strongly J-convex;*
3. *The function F^* is a quadratic function.*

Proof. Assuming *(1)* and taking $g = 0$ we obtain that $F^* = f$. Thus F^* is F-strongly J-convex and from Observation 1, F^* is F^*-strongly J-convex. So, we have *(2)*. Lemma 3 follows the implication *(2)⇒(3)* and from Lemma 1 and Observation 1 we deduce the implication *(3)⇒(1)*. □

It is well known, that each quadratic and continuous function $F : \mathbb{R}^n \to \mathbb{R}$ can be written in the following form $F(x) = xAx^T$, where A is a symmetric matrix of degree n. Therefore, from Theorem 1 we have the following corollary.

COROLLARY 1. For ℓ_p^n spaces where $n \geqslant 2$ we have

$$2^{\frac{2-s}{2}} \|x+y\|_p^s + 2^{\frac{s-2}{2}} \|x-y\|_p^s \leqslant 2^{\frac{s}{2}} \|x\|_p^s + 2^{\frac{s}{2}} \|y\|_p^s, \quad x,y \in \mathbb{R}^n,$$

if and only if $p = s = 2$.

In order to substantiate this corollary let us observe that, multiplying the above inequality by $2^{-\frac{s+2}{2}}$, the function $F(x) := \|x\|_p^s$ must be F-strongly convex and, of course, $F = F^*$. Therefore, from Theorem 1 the function F must be quadratic and consequently we have that

$$F(x) = ax_1^2 + bx_1x_2 + cx_2^2, \tag{5}$$

for $x = (x_1, x_2, 0, \dots, 0) \in \mathbb{R}^n$. From the definition of F and (5), it follows that $a = c$, because $F(x_1, x_2, 0, \dots, 0) = F(x_2, x_1, 0, \dots, 0)$. Now taking $x_1 = 1$, $x_2 = 0$ we conclude that $a = 1$. Hence, for $x_2 = 0$ with arbitrary x_1 we get $s = 2$. Thus

$$\sqrt[p]{|x_1|^p + |x_2|^p} = \sqrt{x_1^2 + bx_1x_2 + x_2^2}.$$

Dividing this equality by $|x_1|$ and tending with $|x_1|$ to infinity we obtain $b = 0$. Thus

$$\sqrt[p]{|x_1|^p + |x_2|^p} = \sqrt{x_1^2 + x_2^2}.$$

Finally, taking in the above equality $x_1 = x_2$ we obtain $p = 2$.

Observe that if we take $n = 1$ in the previous corollary we also get $s = 2$ and, of course, the value of p is unimportant.

At the end of this section, notice that if we additionally assume the continuity of F in Theorem 1, then the function F^* must also be homogeneous of degree 2 (i.e. $F^*(tx) = t^2F^*(x)$ for all $x \in X$ and $t \in \mathbb{R}$) and consequently, using the well known Jordan-von Neumann theorem presented in [2], defines a symmetric bilinear form, thus X is an inner product space.

2.2. Strongly F-convexity

In this section F-strongly convex functions will be considered. We start with three lemmas which are analogous to the lemmas presented in the previous section, respectively.

LEMMA 4. *Let X be a real vector space, D be a nonempty convex subset of X and $F : X \to [0, \infty)$ be a given F-strongly affine function (i.e. we have "$=$" instead of "$\leqslant$" in Definition 1). A function $f : D \to \mathbb{R}$ is F-strongly convex if and only if the function $g = f - F$ is convex.*

Proof. F is a F-strongly affine function thus

$$t(1-t)F(x-y) = -F(tx + (1-t)y) + tF(x) + (1-t)F(y).$$

Now, the inequality

$$f(tx + (1-t)y) \leqslant tf(x) + (1-t)f(y) - t(1-t)F(x-y)$$

can be written in an equivalent form

$$f(tx + (1-t)y) - F(tx + (1-t)y) \leqslant t(f(x) - F(x)) + (1-t)(f(y) - F(y)).$$

Taking $g := f - F$ we get

$$g(tx + (1-t)y) \leqslant tg(x) + (1-t)g(y). \quad \square$$

LEMMA 5. *Let X be a real vector space and $F : X \to [0, \infty)$ be a function that is even. If the function F is F-strongly convex, then F is homogeneous of degree 2.*

Proof. From the assumption the following inequality holds true

$$F(tx+(1-t)y) \leqslant tF(x)+(1-t)F(y)-t(1-t)F(x-y), \tag{6}$$

for all $t \in (0,1)$ and $x,y \in X$. Putting in this inequality $y=0$ and using the fact that $F(0)=0$ we get

$$F(tx) \leqslant tF(x)+t(1-t)F(x) = t^2F(x),$$

thus

$$F(tx) \leqslant t^2F(x), \tag{7}$$

for all $t \in (0,1)$ and $x \in X$. In order to show the reverse inequality, we put $x=(1-t)u$, $y=-tu$ in (6) and using the fact that $F(0)=0$ we have

$$0=F(0) \leqslant tF((1-t)u)+(1-t)F(-tu)-t(1-t)F(u).$$

Now, using the above inequality, (7) and evenness of F we obtain

$$t(1-t)F(u) \leqslant tF((1-t)u)+(1-t)F(tu) \leqslant t(1-t)^2F(u)+(1-t)F(tu).$$

Dividing this inequality by $1-t$ we get

$$tF(u) \leqslant t(1-t)F(u)+F(tu),$$

thus

$$F(tu) \geqslant t^2F(u), \tag{8}$$

for all $t \in (0,1)$ and $u \in X$. From (7) and (8) we conclude that

$$F(tx) = t^2F(x), \tag{9}$$

for all $t \in (0,1)$ and $x \in X$. Moreover, if we substitute in the above equality x with $\frac{x}{t}$ we conclude that (9) holds also for $t>1$. Which together with the evenness of F gives the equality

$$F(tx) = t^2F(x), \tag{10}$$

for all $t \in \mathbb{R}$ and $x \in X$. $\square$

LEMMA 6. *Let X be a real vector space and $F : X \to [0,\infty)$ be a function that is even. The function F is F-strongly convex if and only if F is a F-strongly affine function.*

Proof. Assume that F is F-strongly convex, i.e.

$$F(tx+(1-t)y) \leqslant tF(x)+(1-t)F(y)-t(1-t)F(x-y), \tag{11}$$

for all $t \in (0,1)$ and $x,y \in X$. Now, putting $tx+(1-t)y = u\sqrt{t}$ and $x-y=\frac{v}{\sqrt{t}}$ in (11) and using Lemma 5 we get

$$tF(u) \leqslant F(tu+(1-t)v)+t(1-t)F(u-v)-(1-t)F(v)$$

or equivalently

$$F(tu+(1-t)v) \geqslant tF(u)+(1-t)F(v)-t(1-t)F(u-v),$$

for all $t \in (0,1)$ and $u,v \in X$. This together with (11) implies that

$$F(tu+(1-t)v) = tF(u)+(1-t)F(v)-t(1-t)F(u-v),$$

for all $t \in (0,1)$ and $x,y \in X$, i.e. the function F is F-strongly affine.

The reverse implication is obvious. □

The next result gives the solution of the problem aforementioned in case of F-strongly convexity.

THEOREM 2. *Let X be a real vector space, D be a nonempty convex subset of X and $F : X \to [0,\infty)$ be a given function. The following conditions are equivalent:*

1. *For all function $f : D \to \mathbb{R}$, f is F-strongly convex if and only if the function $g = f - F^*$ is convex;*
2. *The function F^* is F^*-strongly convex;*
3. *The function F^* is F^*-strongly affine (and of course quadratic and homogeneous of degree 2, and X is an inner product space).*

Proof. The implication *(1)*$\Rightarrow$*(2)* we argue as in the proof of Theorem 1. By virtue of Lemma 6 we have the implication *(2)*$\Rightarrow$*(3)*. Finally, using Lemma 4 and Observation 1 we obtain the implication *(3)*$\Rightarrow$*(1)*. □

REFERENCES

[1] J.-B. HIRIART-URRUTY AND C. LEMARÉCHAL, *Fundamentals of Convex Analysis*, Springer-Verlag, Berlin-Heidelberg, 2001.

[2] P. JORDAN AND J. V. NEUMANN, *On inner products in linear metric spaces*, Ann. Math. **36** (1935), 719–723.

[3] K. NIKODEM, ZS. PÁLES, *Characterizations of inner product spaces by strongly convex functions*, Banach J. Math. Anal. **5** (2011), no. 1, 83–87.

[4] B. T. POLYAK, *Existence theorems and convergence of minimizing sequences in extremum problems with restrictions*, Soviet Math. Dokl. **7** (1966), 72–75.

[5] A. W. ROBERTS AND D. E. VARBERG, *Convex Functions*, Academic Press, New York-London, 1973.

[6] J.-P. VIAL, *Strong convexity of sets and functions*, J. Math. Economics **9** (1982), 187–205.

(Received March 16, 2016)

Mirosław Adamek
Department of Mathematics, University of Bielsko-Biała
ul. Willowa 2, PL-43-309 Bielsko-Biała, Poland
e-mail: madamek@ath.bielsko.pl

Mathematical Inequalities & Applications
www.ele-math.com
mia@ele-math.com

Mathematical
Inequalities
& Applications
Volume 19, Number 4 (2016), 1295–1307 doi:10.7153/mia-19-95

ON WEIGHTED INTEGRAL AND DISCRETE OPIAL–TYPE INEQUALITIES

MAJA ANDRIĆ, JOSIP PEČARIĆ AND IVAN PERIĆ

(*Communicated by C. P. Niculescu*)

Abstract. In this paper some multidimensional integral and discrete Opial-type inequalities due to Agarwal, Pang and Sheng are considered. Theirs generalizations and extensions using submultiplicative convex functions, appropriate integral representations of functions, appropriate summation representations of discrete functions and inequalities involving means are presented.

1. Introduction

In 1960, Z. Opial [10] proved next integral inequality:

Let $x(t) \in C^1[0,h]$ be such that $x(0) = x(h) = 0$ and $x(t) > 0$ for $t \in (0,h)$. Then

$$\int_0^h \left|x(t)x'(t)\right| dt \leqslant \frac{h}{4} \int_0^h \left(x'(t)\right)^2 dt, \tag{1}$$

where constant $\frac{h}{4}$ is the best possible.

Over the last five decades, an enormous amount of work has been done on this integral inequality, dealing with new proofs, various generalizations, extensions and discrete analogues. Opial's inequality is recognized as fundamental result in the analysis of qualitative properties of solution of differential equations (see [3, 9] and the references cited therein).

The aim of this paper is to generalize and extend some integral and discrete Opial-type inequalities due to Agarwal, Pang and Sheng ([1, 2, 6]). To establish these inequalities, we will use some elementary techniques such as appropriate integral representations of functions, appropriate summation representations of the discrete functions and inequalities involving means. We start each section with inequality involving a submultiplicative convex function. Recall that function $f : [0,\infty) \to [0,\infty)$ is called *submultiplicative* function if it satisfies the inequality

$$f(xy) \leqslant f(x)f(y), \quad \text{for all } x,y \in [0,\infty)$$

Mathematics subject classification (2010): 26B25, 26D15.
Keywords and phrases: Opial's inequality, Jensen's inequality, integral inequality, discrete inequality, multidimensional inequality.

Paper MIA-19-95

(see for example [8]).

One of such submultiplicative functions, which is also convex and increasing, is $f(x) = x^p \log(e+x)$, where $p \geqslant \frac{1+\sqrt{5}}{2}$. The obtained results will give in a special case improvements of corresponding inequalities in [1, 2, 6], and, at the same time, they will simplify proofs of the corresponding theorems in [4, 5, 7].

For the following inequalities we present obtained generalizations, extensions and improvements: first is a result by Agarwal and Pang from [1], observed in Section 2. Recall, $AC[0,h]$ is the space of all absolutely continuous functions on $[0,h]$. Also, let B denotes the beta function.

THEOREM 1. [1] *Let $\lambda \geqslant 1$ be a given real number and let p be a nonnegative and continuous function on $[0,h]$. Further, let $x \in AC[0,h]$ be such that $x(0) = x(h) = 0$. Then the following inequality holds*

$$\int_0^h p(t)|x(t)|^\lambda dt \leqslant \frac{1}{2}\left(\int_0^h \big(t(h-t)\big)^{\frac{\lambda-1}{2}} p(t)\,dt\right)\int_0^h |x'(t)|^\lambda dt\,. \tag{2}$$

For a constant function p, the inequality (2) reduces to

$$\int_0^h |x(t)|^\lambda dt \leqslant \frac{h^\lambda}{2} B\left(\frac{\lambda+1}{2}, \frac{\lambda+1}{2}\right)\int_0^h |x'(t)|^\lambda dt\,. \tag{3}$$

Next is a multidimensional Poincaré-type inequality by Agarwal and Sheng from [6], observed in Section 3. This inequality involves a special class of continuous functions, a class $G(\Omega)$, whose definition and properties are given at the beginning of Section 3.

THEOREM 2. [6] *Let $\lambda, \mu \geqslant 1$ and let $u \in G(\Omega)$. Then the following inequality holds*

$$\int_\Omega |u(x)|^\lambda\, dx \leqslant K(\lambda,\mu)\int_\Omega \|\operatorname{grad} u(x)\|_\mu^\lambda\, dx\,,$$

where

$$K(\lambda,\mu) = \frac{1}{2m} B\left(\frac{1+\lambda}{2}, \frac{1+\lambda}{2}\right) C\left(\frac{\lambda}{\mu}\right) G_m\left((b-a)^\lambda\right), \tag{4}$$

$$C(\alpha) = \begin{cases} 1, & \alpha \geqslant 1\,, \\ m^{1-\alpha}, & 0 \leqslant \alpha \leqslant 1\,. \end{cases} \tag{5}$$

Finally, a discrete inequality, observed in Section 4, is a result by Agarwal and Pang from [2]. A definition of a class $G(\Omega)$ for the discrete case and a definition of forward difference operator Δ_i are given at the beginning of Section 4.

THEOREM 3. [2] *Let $\lambda \geqslant 1$ and let $u \in G(\Omega)$. Then the following inequality holds*

$$\sum_{x=1}^{X-1} |u(x)|^\lambda \leqslant K(\lambda) \sum_{x=0}^{X-1}\left(\sum_{i=1}^m |\Delta_i u(x)|^2\right)^{\frac{\lambda}{2}},$$

where

$$K(\lambda) = \frac{1}{m} C\left(\frac{\lambda}{2}\right) \prod_{i=1}^{m} \left(\sum_{x_i=1}^{X_i-1} \frac{1}{2} \left(x_i(X_i - x_i)\right)^{\frac{\lambda-1}{2}} \right)^{\frac{1}{m}} \tag{6}$$

and C is defined by (5).

2. Integral inequalities in one variable

First we give a generalization of Theorem 1 involving submultiplicative convex functions. In a special case (Corollary 4) this theorem will improve result from Theorem 1.

THEOREM 4. *Let $n \in \mathbb{N}$ and let f_i be increasing, submultiplicative convex functions on $[0,\infty)$, $i = 1,\dots,n$. Let p be a nonnegative and integrable function on $[0,h]$. Further, let $x_i \in AC[0,h]$ be such that $x_i(0) = x_i(h) = 0$ for $i = 1,\dots,n$. Then the following inequality holds*

$$\begin{aligned} &\int_0^h p(t) \prod_{i=1}^{n} f_i\left(|x_i(t)|\right) dt \\ &\leqslant \left(\int_0^h p(t) \prod_{i=1}^{n} \left(\frac{t}{f_i(t)} + \frac{h-t}{f_i(h-t)} \right)^{-1} dt \right) \prod_{i=1}^{n} \int_0^h f_i\left(|x_i'(t)|\right) dt\,. \end{aligned} \tag{7}$$

Proof. As in [1], for each fixed i, $i = 1,\dots,n$, from the hypotheses of the theorem we have

$$x_i(t) = \int_0^t x_i'(s) ds\,,$$

$$x_i(t) = -\int_t^h x_i'(s) ds\,.$$

Since f_i is an increasing and convex function, we use Jensen's inequality to obtain

$$f_i\left(|x_i(t)|\right) \leqslant f_i\left(\frac{1}{t} \int_0^t t\,|x_i'(s)| ds \right) \leqslant \frac{1}{t} \int_0^t f_i\left(t\,|x_i'(s)|\right) ds$$

and by submultiplicativity of f_i follows

$$f_i\left(|x_i(t)|\right) \leqslant \frac{1}{t} \int_0^t f_i(t) f_i(|x_i'(s)|) ds = \frac{f_i(t)}{t} \int_0^t f_i(|x_i'(s)|) ds\,. \tag{8}$$

Analogously we obtain

$$\begin{aligned} f_i\left(|x_i(t)|\right) &\leqslant f_i\left(\frac{1}{h-t}\int_t^h (h-t)\,|x_i'(s)|ds\right) \\ &\leqslant \frac{1}{h-t}\int_t^h f_i\left((h-t)\,|x_i'(s)|\right)ds \\ &\leqslant \frac{1}{h-t}\int_t^h f_i(h-t)\,f_i(|x_i'(s)|)\,ds \\ &= \frac{f_i(h-t)}{h-t}\int_t^h f_i(|x_i'(s)|)\,ds. \end{aligned} \tag{9}$$

Multiplying (8) by $\frac{t}{f_i(t)}$ and (9) by $\frac{h-t}{f_i(h-t)}$ and adding these inequalities, we find

$$\left(\frac{t}{f_i(t)}+\frac{h-t}{f_i(h-t)}\right)f_i\left(|x_i(t)|\right) \leqslant \int_0^h f_i\left(|x_i'(s)|\right)ds,$$

i.e.

$$f_i\left(|x_i(t)|\right) \leqslant \left(\frac{t}{f_i(t)}+\frac{h-t}{f_i(h-t)}\right)^{-1}\int_0^h f_i\left(|x_i'(s)|\right)ds. \tag{10}$$

This gives us

$$\prod_{i=1}^n f_i\left(|x_i(t)|\right) \leqslant \prod_{i=1}^n\left[\left(\frac{t}{f_i(t)}+\frac{h-t}{f_i(h-t)}\right)^{-1}\int_0^h f_i\left(|x_i'(s)|\right)ds\right]. \tag{11}$$

Now multiplying (11) by p and integrating on $[0,h]$ we obtain

$$\begin{aligned} &\int_0^h p(t)\prod_{i=1}^n f_i\left(|x_i(t)|\right)dt \\ &\leqslant \int_0^h p(t)\prod_{i=1}^n\left[\left(\frac{t}{f_i(t)}+\frac{h-t}{f_i(h-t)}\right)^{-1}\int_0^h f_i\left(|x_i'(s)|\right)ds\right]dt, \end{aligned}$$

which is the inequality (7). $\square$

REMARK 1. For a special class of a submultiplicative convex functions f_i on $[0,\infty)$ with $f_i(0)=0$ $(i=1,\dots,n)$, Theorem 4 also holds. Namely, submultiplicativity of a function implies its positivity, and if f_i is a convex, nonnegative function on $[0,\infty)$ with $f_i(0)=0$, then f_i is obviously an increasing function.

COROLLARY 1. *Let $n\in\mathbb{N}$ and let f_i be increasing, submultiplicative convex functions on $[0,\infty)$, $i=1,\dots,n$. Let p be a nonnegative and integrable function on $[0,h]$. Further, let $x_i\in AC[0,h]$ be such that $x_i(0)=x_i(h)=0$ for $i=1,\dots,n$. Then the following inequality holds*

$$\begin{aligned} &\int_0^h p(t)\prod_{i=1}^n f_i\left(|x_i(t)|\right)dt \\ &\leqslant \frac{1}{2^n}\left(\int_0^h p(t)\prod_{i=1}^n\left(\frac{f_i(t)\,f_i(h-t)}{t\,(h-t)}\right)^{\frac{1}{2}}dt\right)\prod_{i=1}^n\int_0^h f_i\left(|x_i'(t)|\right)dt. \end{aligned} \tag{12}$$

Proof. The inequality (12) follows by the harmonic-geometric inequality

$$2\left(\frac{t}{f_i(t)}+\frac{h-t}{f_i(h-t)}\right)^{-1} \leqslant \left(\frac{f_i(t)\,f_i(h-t)}{t\,(h-t)}\right)^{\frac{1}{2}}. \quad \square$$

For $n=1$ we have two following results.

COROLLARY 2. *Let f be an increasing, submultiplicative convex function on $[0,\infty)$ and let p be a nonnegative and integrable function on $[0,h]$. Further, let $x \in AC[0,h]$ be such that $x(0)=x(h)=0$. Then the following inequality holds*

$$\int_0^h p(t)f\left(|x(t)|\right)dt \leqslant \left(\int_0^h p(t)\left(\frac{t}{f(t)}+\frac{h-t}{f(h-t)}\right)^{-1}dt\right)\int_0^h f\left(|x'(t)|\right)dt. \tag{13}$$

COROLLARY 3. *Let f be an increasing, submultiplicative convex function on $[0,\infty)$ and let p be a nonnegative and integrable function on $[0,h]$. Further, let $x \in AC[0,h]$ be such that $x(0)=x(h)=0$. Then the following inequality holds*

$$\int_0^h p(t)f\left(|x(t)|\right)dt \leqslant \frac{1}{2}\left(\int_0^h p(t)\left(\frac{f(t)\,f(h-t)}{t\,(h-t)}\right)^{\frac{1}{2}}dt\right)\int_0^h f\left(|x'(t)|\right)dt. \tag{14}$$

Next result was proven by Brnetić and Pečarić in [7]. Here it is merely a consequence, a special case of Corollary 2 (as we can see from its proof). By the harmonic-geometric inequality, it is clear that (15) improves (2).

COROLLARY 4. *Let $\lambda \geqslant 1$ be a given real number and let p be a nonnegative and continuous function on $[0,h]$. Further, let $x \in AC[0,h]$ be such that $x(0)=x(h)=0$. Then the following inequality holds*

$$\int_0^h p(t)|x(t)|^{\lambda}dt \leqslant \left(\int_0^h \left(t^{1-\lambda}+(h-t)^{1-\lambda}\right)^{-1}p(t)\,dt\right)\int_0^h |x'(t)|^{\lambda}dt. \tag{15}$$

Proof. The inequality (15) will follow if we use the function $f(t)=t^{\lambda}$ and apply Corollary 2. $\square$

3. Multidimensional integral inequalities

Let Ω be a bounded domain in $\mathbb{R}^m$ defined by $\Omega=\prod_{j=1}^m[a_j,b_j]$. Let $x=(x_1,\ldots,x_m)$ be a general point in Ω and $dx=dx_1\ldots dx_m$. For any continuous real-valued function u defined on Ω we denote $\int_\Omega u(x)\,dx$ the m-fold integral $\int_{a_1}^{b_1}\cdots\int_{a_m}^{b_m}u(x_1,\ldots,x_m)\,dx_1\ldots dx_m$. Let $D_k u(x_1,\ldots,x_m)=\frac{\partial}{\partial x_k}u(x_1,\ldots,x_m)$ and $D^k u(x_1,\ldots,x_m)=D_1\cdots D_k u(x_1,\ldots,x_m)$, $1\leqslant k\leqslant m$.

We denote by $G(\Omega)$ the class of continuous functions $u:\Omega\to\mathbb{R}$ for which $D^m u(x)$ exists with $u(x)|_{x_j=a_j}=u(x)|_{x_j=b_j}=0$, $1\leqslant j\leqslant m$.

Further, let $u(x;s_j) = u(x_1,\dots,x_{j-1},s_j,x_{j+1},\dots,x_m)$, and

$$\|\operatorname{grad} u(x)\|_\mu = \left(\sum_{j=1}^{m}\left|\frac{\partial}{\partial x_j}u(x)\right|^\mu\right)^{\frac{1}{\mu}}.$$

Also let $\alpha = (\alpha_1,\dots,\alpha_m)$ and $\alpha^\lambda = (\alpha_1^\lambda,\dots,\alpha_m^\lambda)$, $\lambda \in \mathbb{R}$. In particular, $(b-a) = (b_1-a_1,\dots,b_m-a_m)$ and $(b-a)^\lambda = ((b_1-a_1)^\lambda,\dots,(b_m-a_m)^\lambda)$. For the geometric and the harmonic means of $\alpha_1,\dots,\alpha_m$ we will use $G_m(\alpha)$ and $H_m(\alpha)$, respectively. Let $M^{[k]}(\alpha)$ denote the mean of order k of $\alpha_1,\dots,\alpha_m$.

We start with a weighted extension of Theorem 2 involving submultiplicative convex function. Again, in a special case (Corollary 6) this theorem will improve result from Theorem 2.

THEOREM 5. *Let f be an increasing, submultiplicative convex function on $[0,\infty)$. Let p be a nonnegative and integrable function on Ω and $u \in G(\Omega)$. Then the following inequality holds*

$$\int_\Omega p(x) f(|u(x)|)\,dx \leqslant \frac{1}{m}H_m(\alpha)\int_\Omega\left(\sum_{i=1}^{m} f\left(\left|\frac{\partial}{\partial x_i}u(x)\right|\right)\right)dx, \tag{16}$$

where $\alpha = (\alpha_1,\dots,\alpha_m)$ and

$$\alpha_i = \int_{a_i}^{b_i}\left(\frac{x_i-a_i}{f(x_i-a_i)} + \frac{b_i-x_i}{f(b_i-x_i)}\right)^{-1} p(x)\,dx_i, \quad i = 1,\dots,m.$$

Proof. For each fixed i, $i = 1,\dots,m$, we have

$$u(x) = \int_{a_i}^{x_i}\frac{\partial}{\partial s_i}u(x;s_i)\,ds_i$$

and

$$u(x) = -\int_{x_i}^{b_i}\frac{\partial}{\partial s_i}u(x;s_i)\,ds_i.$$

First we use Jensen's inequality (since f is an increasing convex function) and then submultiplicativity of f, to obtain

$$\begin{aligned} f(|u(x)|) &\leqslant f\left(\frac{1}{x_i-a_i}\int_{a_i}^{x_i}(x_i-a_i)\left|\frac{\partial}{\partial s_i}u(x;s_i)\right|ds_i\right) \\ &\leqslant \frac{1}{x_i-a_i}\int_{a_i}^{x_i} f\left((x_i-a_i)\left|\frac{\partial}{\partial s_i}u(x;s_i)\right|\right)ds_i \\ &\leqslant \frac{1}{x_i-a_i}\int_{a_i}^{x_i} f(x_i-a_i) f\left(\left|\frac{\partial}{\partial s_i}u(x;s_i)\right|\right)ds_i \\ &= \frac{f(x_i-a_i)}{x_i-a_i}\int_{a_i}^{x_i} f\left(\left|\frac{\partial}{\partial s_i}u(x;s_i)\right|\right)ds_i \end{aligned} \tag{17}$$

and analogously

$$f(|u(x)|) \leqslant \frac{f(b_i - x_i)}{b_i - x_i} \int_{x_i}^{b_i} f\left(\left|\frac{\partial}{\partial s_i} u(x;s_i)\right|\right) ds_i\,, \tag{18}$$

for $i = 1,\dots,m$. Multiplying (17) by $\frac{x_i - a_i}{f(x_i - a_i)}$ and (18) by $\frac{b_i - x_i}{f(b_i - x_i)}$ and adding these inequalities, we find

$$\left(\frac{x_i - a_i}{f(x_i - a_i)} + \frac{b_i - x_i}{f(b_i - x_i)}\right) f(|u(x)|) \leqslant \int_{a_i}^{b_i} f\left(\left|\frac{\partial}{\partial s_i} u(x;s_i)\right|\right) ds_i\,,$$

i.e.

$$f(|u(x)|) \leqslant \left(\frac{x_i - a_i}{f(x_i - a_i)} + \frac{b_i - x_i}{f(b_i - x_i)}\right)^{-1} \int_{a_i}^{b_i} f\left(\left|\frac{\partial}{\partial s_i} u(x;s_i)\right|\right) ds_i\,, \tag{19}$$

for $i = 1,\dots,m$. Now multiplying (19) by p and integrating on Ω we obtain

$$\begin{aligned}\int_\Omega p(x) f(|u(x)|)\,dx \leqslant \int_{a_i}^{b_i} &\left(\frac{x_i - a_i}{f(x_i - a_i)} + \frac{b_i - x_i}{f(b_i - x_i)}\right)^{-1} p(x)\,dx_i \\ &\times \int_\Omega f\left(\left|\frac{\partial}{\partial x_i} u(x)\right|\right) dx\,,\end{aligned} \tag{20}$$

i.e.

$$\begin{aligned}\left(\int_{a_i}^{b_i} \left(\frac{x_i - a_i}{f(x_i - a_i)} + \frac{b_i - x_i}{f(b_i - x_i)}\right)^{-1} p(x)\,dx_i\right)^{-1} &\int_\Omega p(x) f(|u(x)|)\,dx \\ &\leqslant \int_\Omega f\left(\left|\frac{\partial}{\partial x_i} u(x)\right|\right) dx\,,\end{aligned} \tag{21}$$

for $i = 1,\dots,m$. Notice that

$$\alpha_i^{-1} = \left(\int_{a_i}^{b_i} \left(\frac{x_i - a_i}{f(x_i - a_i)} + \frac{b_i - x_i}{f(b_i - x_i)}\right)^{-1} p(x)\,dx_i\right)^{-1}, \quad i = 1,\dots,m.$$

Now, by summing these m inequalities (21), we find

$$\sum_{i=1}^m \alpha_i^{-1} \int_\Omega p(x) f(|u(x)|)\,dx \leqslant \sum_{i=1}^m \int_\Omega f\left(\left|\frac{\partial}{\partial x_i} u(x)\right|\right) dx\,,$$

which is the same as the inequality (16). □

COROLLARY 5. *Let f be an increasing, submultiplicative convex function on $[0,\infty)$. Let p be a nonnegative and integrable function on Ω and let $u \in G(\Omega)$. Then the following inequality holds*

$$\int_\Omega p(x) f(|u(x)|)\,dx \leqslant \frac{1}{2m} H_m(\beta) \int_\Omega \left(\sum_{i=1}^m f\left(\left|\frac{\partial}{\partial x_i} u(x)\right|\right)\right) dx\,, \tag{22}$$

where $\beta = (\beta_1, \dots, \beta_m)$ *and*

$$\beta_i = \int_{a_i}^{b_i} \left(\frac{f(x_i - a_i)\, f(b_i - x_i)}{(x_i - a_i)\,(b_i - x_i)} \right)^{\frac{1}{2}} p(x)\, dx_i\,, \quad i = 1, \dots, m\,.$$

Proof. By harmonic-geometric inequality we have

$$2\left(\frac{x_i - a_i}{f(x_i - a_i)} + \frac{b_i - x_i}{f(b_i - x_i)} \right)^{-1} \leqslant \left(\frac{f(x_i - a_i)\, f(b_i - x_i)}{(x_i - a_i)\,(b_i - x_i)} \right)^{\frac{1}{2}}.$$

Applying this and using $H_m(\frac{1}{2}\gamma) = \frac{1}{2} H_m(\gamma)$, the inequality (22) follows. □

Next result was proven by Agarwal, Brnetić and Pečarić in [4]. Here we use Theorem 5 applied on a constant function p and the function $f(t) = t^\lambda$ to prove the inequality (23). By the harmonic-geometric inequality, it follows that Corollary 6 improves Theorem 2.

COROLLARY 6. *Let* $\lambda, \mu \geqslant 1$ *and let* $u \in G(\Omega)$. *Then the following inequality holds*

$$\int_\Omega |u(x)|^\lambda\, dx \leqslant K_1(\lambda, \mu) \int_\Omega \|\operatorname{grad} u(x)\|_\mu^\lambda\, dx\,, \tag{23}$$

where

$$K_1(\lambda, \mu) = \frac{1}{m} I(\lambda)\, C\left(\frac{\lambda}{\mu}\right) H_m\left((b-a)^\lambda\right), \tag{24}$$

$$I(\lambda) = \int_0^1 \left(t^{1-\lambda} + (1-t)^{1-\lambda}\right)^{-1} dt \tag{25}$$

and C *is defined by* (5).

Proof. We follow steps from the proof of Theorem 5, using the function $f(t) = t^\lambda$, up to the inequality (20), which is now equal to

$$\int_\Omega |u(x)|^\lambda\, dx \leqslant \int_{a_i}^{b_i} \left((x_i - a_i)^{1-\lambda} + (b_i - x_i)^{1-\lambda}\right)^{-1} dx_i \int_\Omega \left| \frac{\partial}{\partial x_i} u(x) \right|^\lambda dx \tag{26}$$

for $i = 1, \dots, m$. However, since

$$\begin{aligned} \int_{a_i}^{b_i} \left((x_i - a_i)^{1-\lambda} + (b_i - x_i)^{1-\lambda}\right)^{-1} dx_i &= (b_i - a_i)^\lambda \int_0^1 \left(t^{1-\lambda} + (1-t)^{1-\lambda}\right)^{-1} dt \\ &= (b_i - a_i)^\lambda\, I(\lambda)\,, \end{aligned}$$

the inequality (26) can be written as

$$\int_\Omega |u(x)|^\lambda\, dx \leqslant (b_i - a_i)^\lambda\, I(\lambda) \int_\Omega \left| \frac{\partial}{\partial x_i} u(x) \right|^\lambda dx\,. \tag{27}$$

Multiplying both sides of the inequality (27) by $(b_i - a_i)^{-\lambda}$, $i = 1,\dots,m$, and then summing these inequalities, we obtain

$$\sum_{i=1}^{m}(b_i - a_i)^{-\lambda}\int_{\Omega}|u(x)|^{\lambda}\,dx \leqslant I(\lambda)\int_{\Omega}\left(\sum_{i=1}^{m}\left|\frac{\partial}{\partial x_i}u(x)\right|^{\lambda}\right)dx,$$

i.e.

$$\int_{\Omega}|u(x)|^{\lambda}\,dx \leqslant \frac{1}{m}I(\lambda)H_m\left((b-a)^{\lambda}\right)\int_{\Omega}\left(\sum_{i=1}^{m}\left|\frac{\partial}{\partial x_i}u(x)\right|^{\lambda}\right)dx. \tag{28}$$

Our result now follows from (28) and the elementary inequality

$$\sum_{i=1}^{m}a_i^{\alpha} \leqslant C(\alpha)\left(\sum_{i=1}^{m}a_i\right)^{\alpha}, \quad a_i \geqslant 0. \tag{29}$$

□

4. Multidimensional discrete inequalities

Let $x, X \in \mathbb{N}_0^m$ be such that $x \leqslant X$, i.e., $x_i \leqslant X_i$, $i = 1,\dots,m$. Let $\Omega = [0,X]$, where $[0,X] \subset \mathbb{N}_0^m$. We denote by $G(\Omega)$ the class of functions $u : \Omega \to \mathbb{R}$, which satisfies conditions $u(x)|_{x_i=0} = u(x)|_{x_i=X_i} = 0$, $i = 1,\dots,m$. For u we define forward difference operators Δ_i, $i = 1,\dots,m$, as

$$\Delta_i u(x) \;=\; u(x_1,\dots,x_{i-1},x_i+1,x_{i+1},\dots,x_m) - u(x).$$

As in a previous section, let $u(x;s_i)$ stand for $u(x_1,\dots,x_{i-1},s_i,x_{i+1},\dots,x_m)$, $\alpha = (\alpha_1,\dots,\alpha_m)$ and let $H_m(\alpha)$ denote the harmonic mean of $\alpha_1,\dots,\alpha_m$. Also, let $\sum\limits_{x=1}^{X-1}$ denote $\sum\limits_{j=1}^{m}\sum\limits_{x_j=1}^{X_j-1}$.

First we present a weighted extension of Theorem 3 involving submultiplicative convex functions.

THEOREM 6. *Let $n \in \mathbb{N}$ and let f_j be submultiplicative convex functions on $[0,\infty)$ with $f_j(0) = 0$, $j = 1,\dots,n$. Let p be a nonnegative function on Ω and let $u_j \in G(\Omega)$ for $j = 1,\dots,n$. Then the following inequality holds*

$$\sum_{x=1}^{X-1}p(x)\prod_{j=1}^{n}f_j\left(|u_j(x)|\right) \leqslant \frac{1}{m}H_m(\alpha)\sum_{i=1}^{m}\prod_{j=1}^{n}\sum_{x=0}^{X-1}f_j\left(|\Delta_i u_j(x)|\right), \tag{30}$$

where $\alpha = (\alpha_1,\dots,\alpha_m)$ and

$$\alpha_i = \sum_{x_i=1}^{X_i-1}p(x)\prod_{j=1}^{n}\left(\frac{x_i}{f_j(x_i)} + \frac{X_i - x_i}{f_j(X_i - x_i)}\right)^{-1}, \quad i = 1,\dots,m. \tag{31}$$

Proof. For each fixed i $(i=1,\dots,m)$ and each fixed j $(j=1,\dots,n)$ we have

$$u_j(x)=\sum_{s_i=0}^{x_i-1}\Delta_i u_j(x;s_i)\,,\qquad u_j(x)=-\sum_{s_i=x_i}^{X_i-1}\Delta_i u_j(x;s_i)\,.$$

From the discrete case of Jensen's inequality (since f_j is an increasing convex function) and the submultiplicativity of f_j, we have

$$\begin{aligned}
f_j(|u_j(x)|) &\leqslant f_j\left(\frac{1}{x_i}\sum_{s_i=0}^{x_i-1}x_i\left|\Delta_i u_j(x;s_i)\right|\right)\\
&\leqslant \frac{1}{x_i}\sum_{s_i=0}^{x_i-1}f_j\left(x_i\left|\Delta_i u_j(x;s_i)\right|\right)\\
&\leqslant \frac{1}{x_i}\sum_{s_i=0}^{x_i-1}f_j(x_i)\,f_j\left(\left|\Delta_i u_j(x;s_i)\right|\right)\\
&= \frac{f_j(x_i)}{x_i}\sum_{s_i=0}^{x_i-1}f_j\left(\left|\Delta_i u_j(x;s_i)\right|\right)
\end{aligned}\tag{32}$$

and analogously

$$f_j(|u_j(x)|)\;\leqslant\;\frac{f_j(X_i-x_i)}{X_i-x_i}\sum_{s_i=x_i}^{X_i-1}f_j\left(\left|\Delta_i u_j(x;s_i)\right|\right)\tag{33}$$

for $i=1,\dots,m$. We multiply (32) by $\frac{x_i}{f_j(x_i)}$ and (33) by $\frac{X_i-x_i}{f_j(X_i-x_i)}$. Then we add these resulting inequalities, to obtain

$$\left(\frac{x_i}{f_j(x_i)}+\frac{X_i-x_i}{f_j(X_i-x_i)}\right)f_j(|u_j(x)|)\leqslant\sum_{s_i=0}^{X_i-1}f_j\left(\left|\Delta_i u_j(x;s_i)\right|\right),$$

i.e.

$$f_j(|u_j(x)|)\leqslant\left(\frac{x_i}{f_j(x_i)}+\frac{X_i-x_i}{f_j(X_i-x_i)}\right)^{-1}\sum_{s_i=0}^{X_i-1}f_j\left(\left|\Delta_i u_j(x;s_i)\right|\right)\tag{34}$$

for $i=1,\dots,m$. This gives us

$$\prod_{j=1}^{n}f_j(|u_j(x)|)\leqslant\prod_{j=1}^{n}\left[\left(\frac{x_i}{f_j(x_i)}+\frac{X_i-x_i}{f_j(X_i-x_i)}\right)^{-1}\sum_{s_i=0}^{X_i-1}f_j\left(\left|\Delta_i u_j(x;s_i)\right|\right)\right]\tag{35}$$

for $i=1,\dots,m$. Now multiplying (35) by p we get

$$\begin{aligned}
&p(x)\prod_{j=1}^{n}f_j(|u_j(x)|)\\
&\leqslant p(x)\left[\prod_{j=1}^{n}\left(\frac{x_i}{f_j(x_i)}+\frac{X_i-x_i}{f_j(X_i-x_i)}\right)^{-1}\right]\left[\prod_{j=1}^{n}\sum_{s_i=0}^{X_i-1}f_j\left(\left|\Delta_i u_j(x;s_i)\right|\right)\right]
\end{aligned}$$

for $i=1,\dots,m$. Summing from $x=1$ to $x=X-1$, we get

$$\sum_{x=1}^{X-1} p(x)\prod_{j=1}^{n} f_j(|u_j(x)|)$$
$$\leqslant \left(\sum_{x_i=1}^{X_i-1} p(x)\prod_{j=1}^{n}\left(\frac{x_i}{f_j(x_i)}+\frac{X_i-x_i}{f_j(X_i-x_i)}\right)^{-1}\right)\prod_{j=1}^{n}\sum_{x=0}^{X-1} f_j\left(\left|\Delta_i u_j(x)\right|\right) \tag{36}$$

for $i=1,\dots,m$. Multiplying both sides of the inequality (36) by α_i^{-1} and then adding these m inequalities , we obtain

$$\sum_{i=1}^{m}\alpha_i^{-1}\sum_{x=1}^{X-1} p(x)\prod_{j=1}^{n} f_j\left(\left|u_j(x)\right|\right) \leqslant \sum_{i=1}^{m}\prod_{j=1}^{n}\sum_{x=0}^{X-1} f_j\left(\left|\Delta_i u_j(x)\right|\right),$$

which is the same as the inequality (30). □

COROLLARY 7. *Let $n\in\mathbb{N}$ and let f_j be submultiplicative convex functions on $[0,\infty)$ with $f_j(0)=0$, $j=1,\dots,n$. Let p be a nonnegative function on Ω and let $u_j\in G(\Omega)$ for $j=1,\dots,n$. Then the following inequality holds*

$$\sum_{x=1}^{X-1} p(x)\prod_{j=1}^{n} f_j\left(\left|u_j(x)\right|\right) \leqslant \frac{1}{2^n m} H_m(\beta)\sum_{i=1}^{m}\prod_{j=1}^{n}\sum_{x=0}^{X-1} f_j\left(|\Delta_i u_j(x)|\right), \tag{37}$$

where $\beta=(\beta_1,\dots,\beta_m)$ and

$$\beta_i=\sum_{x_i=1}^{X_i-1} p(x)\prod_{j=1}^{n}\left(\frac{f_j(x_i)\,f_j(X_i-x_i)}{x_i\,(X_i-x_i)}\right)^{\frac{1}{2}}, \quad i=1,\dots,m. \tag{38}$$

Proof. By harmonic-geometric inequality we have

$$2\left(\frac{x_i}{f_j(x_i)}+\frac{X_i-x_i}{f_j(X_i-x_i)}\right)^{-1} \leqslant \left(\frac{f_j(x_i)\,f_j(X_i-x_i)}{x_i\,(X_i-x_i)}\right)^{\frac{1}{2}}.$$

Applying this and using $H_m(\frac{1}{2^n}\beta)=\frac{1}{2^n}H_m(\beta)$, the inequality (37) follows. □

Next are special results for $n=1$.

COROLLARY 8. *Let f be a submultiplicative convex function on $[0,\infty)$ with $f(0)=0$. Let p be a nonnegative function on Ω and $u\in G(\Omega)$. Then the following inequality holds*

$$\sum_{x=1}^{X-1} p(x)\,f\left(|u(x)|\right) \leqslant \frac{1}{m} H_m(\alpha)\sum_{x=0}^{X-1}\sum_{i=1}^{m} f\left(|\Delta_i u(x)|\right), \tag{39}$$

where $\alpha=(\alpha_1,\dots,\alpha_m)$ is defined by (31).

COROLLARY 9. *Let f be a submultiplicative convex function on $[0,\infty)$ with $f(0)=0$. Let p be a nonnegative function on Ω and $u \in G(\Omega)$. Then the following inequality holds*

$$\sum_{x=1}^{X-1} p(x) f(|u(x)|) \leqslant \frac{1}{2m} H_m(\beta) \sum_{x=0}^{X-1} \sum_{i=1}^{m} f(|\Delta_i u(x)|), \tag{40}$$

where $\beta = (\beta_1, \ldots, \beta_m)$ is defined by (38).

An improvement of Theorem 3 is the following result, given also Agarwal, Brnetić and Pečarić in [5]. Here we use Corollary 8 applied on a constant function p and the function $f(t) = t^\lambda$ to prove the inequality (41). Thus again, by the harmonic-geometric inequality, it follows that Corollary 10 for $\mu = 2$ improves Theorem 3.

COROLLARY 10. *Let $\lambda, \mu \geqslant 1$ and let $u \in G(\Omega)$. Then the following inequality holds*

$$\sum_{x=1}^{X-1} |u(x)|^\lambda \leqslant K_1(\lambda,\mu) \sum_{x=0}^{X-1} \left(\sum_{i=1}^{m} |\Delta_i u(x)|^\mu \right)^{\frac{\lambda}{\mu}}, \tag{41}$$

where

$$K_1(\lambda,\mu) = \frac{1}{m} C\left(\frac{\lambda}{\mu}\right) H_m(h(x,X,\lambda)), \tag{42}$$

$$h(x,X,\lambda) = (h_1(x,X,\lambda), \ldots, h_m(x,X,\lambda)), \tag{43}$$

$$h_i(x,X,\lambda) = \sum_{x_i=1}^{X_i-1} \left(x_i^{1-\lambda} + (X_i - x_i)^{1-\lambda} \right)^{-1}, \quad i = 1, \ldots, m$$

and C is defined by (5).

Proof. From Corollary 8 using the function $f(t) = t^\lambda$ (and a constant function p) we have

$$\sum_{x=1}^{X-1} |u(x)|^\lambda \leqslant \frac{1}{m} H_m(h(x,X,\lambda)) \sum_{x=0}^{X-1} \sum_{i=1}^{m} |\Delta_i u(x)|^\lambda. \tag{44}$$

The inequality (41) now follows from (44) and the elementary inequality (29). □

Acknowledgement. This work has been fully supported by Croatian Science Foundation under the project 5435.

REFERENCES

[1] R. P. AGARWAL AND P. Y. H. PANG, *Remarks on the generalization of Opial's inequality*, J. Math. Anal. Appl., **190** (1995), 559–577.

[2] R. P. AGARWAL AND P. Y. H. PANG, *Sharp discrete inequalities in n independent variables*, Appl. Math. Comp., **72** (1995), 97–112.

[3] R. P. AGARWAL AND P. Y. H. PANG, *Opial Inequalities with Applications in Differential and Difference Equations*, Kluwer Academic Publishers, Dordrecht, Boston, London, 1995.

[4] R. P. AGARWAL, J. PEČARIĆ AND I. BRNETIĆ, *Improved integral inequalities in n independent variables*, Computers Math. Applic., **33**, 8 (1997), 27–38.

[5] R. P. AGARWAL, J. PEČARIĆ AND I. BRNETIĆ, *Improved discrete inequalities in n independent variables*, Appl. Math. Lett., **11**, 2 (1998), 91–97.
[6] R. P. AGARWAL AND Q. SHENG, *Sharp integral inequalities in n independent variables*, Nonlinear Anal., **26** (1996), 179–210.
[7] I. BRNETIĆ AND J. PEČARIĆ, *Some new Opial-type inequalities*, Math. Inequal. Appl., **1**, 3 (1998), 385–390.
[8] J. GUSTAVSSON, L. MALIGRANDA AND J. PEETRE, *A submultiplicative function*, Nederl. Akad. Wetensch. Indag. Math., **51**, 4 (1989), 435–442.
[9] D. S. MITRINOVIĆ, J. PEČARIĆ AND A. M. FINK, *Inequalities Involving Functions and Their Integrals and Derivatives*, Kluwer Academic Publishers, Dordrecht, 1991.
[10] Z. OPIAL, *Sur une inégalité*, Ann. Polon. Math., **8** (1960), 29–32.

(Received March 17, 2016)

Maja Andrić
Faculty of Civil Engineering, Architecture and Geodesy
University of Split
Matice hrvatske 15, 21000 Split, Croatia
e-mail: maja.andric@gradst.hr

Josip Pečarić
Faculty of Textile Technology, University of Zagreb
Prilaz baruna Filipovića 28a, 10000 Zagreb, Croatia
e-mail: pecaric@element.hr

Ivan Perić
Faculty of Food Technology and Biotechnology
University of Zagreb
Pierottijeva 6, 10000 Zagreb, Croatia
e-mail: iperic@pbf.hr

Mathematical Inequalities & Applications
www.ele-math.com
mia@ele-math.com

Mathematical
Inequalities
& Applications
Volume 19, Number 4 (2016), 1309–1318 doi:10.7153/mia-19-96

POPOVICIU TYPE INEQUALITIES VIA HERMITE'S POLYNOMIAL

SAAD IHSAN BUTT, KHURAM ALI KHAN AND JOSIP PEČARIĆ

(*Communicated by S. Varošanec*)

Abstract. We obtain useful identities via Hermite interpolation polynomial, by which the inequality of Popoviciu for convex functions is generalized for higher order convex functions. We investigate the bounds for the identities extracted by the generalization of the Popoviciu inequality using inequalities for the Čebyšev functional. Some results relating to the Grüss and Ostrowski type inequalities are constructed.

1. Introduction

A characterization of convex function established by T. Popoviciu [11] is studied by many people (see [12, 10] and references with in). For recent work, we refer [5, 7, 8, 9]. The following form of Popoviciu's inequality is established by Vasić and Stanković in [12] (see also page 173 [10]):

THEOREM 1. *Let $z,w \in \mathbb{N}$, $z \geqslant 3$, $2 \leqslant w \leqslant z-1$, $[\alpha,\beta] \subset \mathbb{R}$, $\mathbf{x} = (x_1,\dots,x_z) \in [\alpha,\beta]^z$, $\mathbf{p} = (p_1,\dots,p_z)$ be a positive z-tuple such that $\sum_{u=1}^{z} p_u = 1$. Also let $f : [\alpha,\beta] \to \mathbb{R}$ be a convex function. Then*

$$p_{w,z}(\mathbf{x},\mathbf{p};f) \leqslant \frac{z-w}{z-1} p_{1,z}(\mathbf{x},\mathbf{p};f) + \frac{w-1}{z-1} p_{z,z}(\mathbf{x},\mathbf{p};f), \tag{1}$$

where

$$p_{w,z}(\mathbf{x},\mathbf{p};f) = p_{w,z}(\mathbf{x},\mathbf{p};f(x)) := \frac{1}{\binom{z-1}{w-1}} \sum_{1 \leqslant u_1 < \dots < u_l \leqslant z} \left(\sum_{v=1}^{w} p_{u_v} \right) f\left(\frac{\sum_{v=1}^{w} p_{u_v} x_{u_v}}{\sum_{v=1}^{w} p_{u_v}} \right)$$

is the linear functional with respect to f.

By inequality (1), we write

$$\mathbf{P}(\mathbf{x},\mathbf{p};f) := \frac{z-w}{z-1} p_{1,z}(\mathbf{x},\mathbf{p};f) + \frac{w-1}{z-1} p_{z,z}(\mathbf{x},\mathbf{p};f) - p_{w,z}(\mathbf{x},\mathbf{p};f); \quad 2 \leqslant w \leqslant z-1. \tag{2}$$

Mathematics subject classification (2010): Primary 26D07, 26D15, 26D20, 26D99.
Keywords and phrases: Convex function, divided difference, Hermite interpolation, Čebyšev functional, Grüss inequality, Ostrowski inequality, exponential convexity.

Paper MIA-19-96

REMARK 1. It is important to note that under the assumptions of Theorem 1, if the function f is convex then $\mathbf{P}(\mathbf{x},\mathbf{p};f) \geqslant 0$ and $\mathbf{P}(\mathbf{x},\mathbf{p};f) = 0$ if f is an identity or constant function.

The mean value theorems and exponential convexity of the linear functional $\mathbf{P}(\mathbf{x},\mathbf{p};f)$ are given in [7] for positive tuples $\mathbf{p}$. Some special classes of convex functions are considered to construct the exponential convexity of $\mathbf{P}(\mathbf{x},\mathbf{p};f)$ in [7].

Let $-\infty < \alpha < \beta < \infty$ and $\alpha = a_1 < a_2 \ldots < a_r = \beta$, $(r \geqslant 2)$ be the given points. For $\psi \in C^n[\alpha,\beta]$ a unique polynomial $\rho_H(s)$ of degree $(n-1)$ exists satisfying any of the following conditions:
Hermite conditions:

$$\rho_H^{(i)}(a_j) = \psi^{(i)}(a_j); \quad 0 \leqslant i \leqslant k_j, \quad 1 \leqslant j \leqslant r, \quad \sum_{j=1}^{r} k_j + r = n. \tag{H}$$

It is of great interest to note that Hermite conditions include the following particular cases:
Lagrange conditions: $(r = n,\ k_j = 0$ for all $j)$

$$\rho_L(a_j) = \psi(a_j), \quad 1 \leqslant j \leqslant n,$$

Type $(m, n-m)$ *conditions*: $(r = 2,\ 1 \leqslant m \leqslant n-1,\ k_1 = m-1,\ k_2 = n-m-1)$

$$\rho_{(m,n)}^{(i)}(\alpha) = \psi^{(i)}(\alpha), \quad 0 \leqslant i \leqslant m-1,$$

$$\rho_{(m,n)}^{(i)}(\beta) = \psi^{(i)}(\beta), \quad 0 \leqslant i \leqslant n-m-1,$$

Two-point Taylor conditions: $(n = 2m,\ r = 2,\ k_1 = k_2 = m-1)$

$$\rho_{2T}^{(i)}(\alpha) = \psi^{(i)}(\alpha), \quad \rho_{2T}^{(i)}(\beta) = \psi^{(i)}(\beta), \quad 0 \leqslant i \leqslant m-1.$$

We have the following result from [1].

THEOREM 2. *Let* $-\infty < \alpha < \beta < \infty$ *and* $\alpha \leqslant a_1 < a_2 \ldots < a_r \leqslant \beta$, $(r \geqslant 2)$ *be the given points, and* $\psi \in C^n([\alpha,\beta])$. *Then we have*

$$\psi(t) = \rho_H(t) + R_H(\psi,t) \tag{3}$$

where $\rho_H(t)$ *is the Hermite interpolating polynomial, i.e.*

$$\rho_H(t) = \sum_{j=1}^{r} \sum_{i=0}^{k_j} H_{ij}(t)\psi^{(i)}(a_j);$$

the H_{ij} *are fundamental polynomials of the Hermite basis defined by*

$$H_{ij}(t) = \frac{1}{i!} \frac{\omega(t)}{(t-a_j)^{k_j+1-i}} \sum_{k=0}^{k_j-i} \frac{1}{k!} \frac{d^k}{dt^k} \left(\frac{(t-a_j)^{k_j+1}}{\omega(t)} \right) \Bigg|_{t=a_j} (t-a_j)^k, \tag{4}$$

with

$$\omega(t)=\prod_{j=1}^{r}(t-a_j)^{k_j+1},$$

and the remainder is given by

$$R_H(\psi,t)=\int_{\alpha}^{\beta}G_{H,n}(t,s)\psi^{(n)}(s)ds$$

where $G_{H,n}(t,s)$ *is defined by*

$$G_{H,n}(t,s)=\begin{cases}\sum\limits_{j=1}^{l}\sum\limits_{i=0}^{k_j}\frac{(a_j-s)^{n-i-1}}{(n-i-1)!}H_{ij}(t);\ s\leqslant t,\\ -\sum\limits_{j=l+1}^{r}\sum\limits_{i=0}^{k_j}\frac{(a_j-s)^{n-i-1}}{(n-i-1)!}H_{ij}(t);\ s\geqslant t,\end{cases}\tag{5}$$

for all $a_l\leqslant s\leqslant a_{l+1}$; $l=0,\dots,r$ *with* $a_0=\alpha$ *and* $a_{r+1}=\beta$.

REMARK 2. In particular cases, for Lagrange conditions, from Theorem 2 we have

$$\psi(t)=\rho_L(t)+R_L(\psi,t)$$

where $\rho_L(t)$ is the Lagrange interpolating polynomial i.e,

$$\rho_L(t)=\sum_{j=1}^{n}\prod_{\substack{k=1\\k\neq j}}^{n}\left(\frac{t-a_k}{a_j-a_k}\right)\psi(a_j)$$

and the remainder $R_L(\psi,t)$ is given by

$$R_L(\psi,t)=\int_{\alpha}^{\beta}G_L(t,s)\psi^{(n)}(s)ds$$

with

$$G_L(t,s)=\frac{1}{(n-1)!}\begin{cases}\sum\limits_{j=1}^{l}(a_j-s)^{n-1}\prod\limits_{\substack{k=1\\k\neq j}}^{n}\left(\frac{t-a_k}{a_j-a_k}\right), & s\leqslant t\\ -\sum\limits_{j=l+1}^{n}(a_j-s)^{n-1}\prod\limits_{\substack{k=1\\k\neq j}}^{n}\left(\frac{t-a_k}{a_j-a_k}\right), & s\geqslant t\end{cases}\tag{6}$$

$a_l\leqslant s\leqslant a_{l+1},\ l=1,2,\dots,n-1$ with $a_1=\alpha$ and $a_n=\beta$.

For type $(m,n-m)$ conditions, from Theorem 2 we have

$$\psi(t)=\rho_{(m,n)}(t)+R_{(m,n)}(\psi,t)$$

where $\rho_{(m,n)}(t)$ is $(m,n-m)$ interpolating polynomial, i.e

$$\rho_{(m,n)}(t)=\sum_{i=0}^{m-1}\tau_i(t)\psi^{(i)}(\alpha)+\sum_{i=0}^{n-m-1}\eta_i(t)\psi^{(i)}(\beta),$$

with

$$\tau_i(t) = \frac{1}{i!}(t-\alpha)^i\Big(\frac{t-\beta}{\alpha-\beta}\Big)^{n-m}\sum_{k=0}^{m-1-i}\binom{n-m+k-1}{k}\Big(\frac{t-\alpha}{\beta-\alpha}\Big)^k \tag{7}$$

and

$$\eta_i(t) = \frac{1}{i!}(t-\beta)^i\Big(\frac{t-\alpha}{\beta-\alpha}\Big)^{m}\sum_{k=0}^{n-m-1-i}\binom{m+k-1}{k}\Big(\frac{t-\beta}{\alpha-\beta}\Big)^k. \tag{8}$$

and the remainder $R_{(m,n)}(\psi,t)$ is given by

$$R_{(m,n)}(\psi,t) = \int_\alpha^\beta G_{(m,n)}(t,s)\psi^{(n)}(s)ds$$

with

$$G_{(m,n)}(t,s) = \begin{cases} \sum\limits_{j=0}^{m-1}\Big[\sum\limits_{p=0}^{m-1-j}\binom{n-m+p-1}{p}\Big(\frac{t-\alpha}{\beta-\alpha}\Big)^p\Big] \\ \times\frac{(t-\alpha)^j(\alpha-s)^{n-j-1}}{j!(n-j-1)!}\Big(\frac{\beta-t}{\beta-\alpha}\Big)^{n-m}, & \alpha\leqslant s\leqslant t\leqslant\beta \\ -\sum\limits_{i=0}^{n-m-1}\Big[\sum\limits_{q=0}^{n-m-i-1}\binom{m+q-1}{q}\Big(\frac{\beta-t}{\beta-\alpha}\Big)^q\Big] \\ \times\frac{(t-\beta)^i(\beta-s)^{n-i-1}}{i!(n-i-1)!}\Big(\frac{t-\alpha}{\beta-\alpha}\Big)^m, & \alpha\leqslant t\leqslant s\leqslant\beta. \end{cases} \tag{9}$$

For Type Two-point Taylor conditions, from Theorem 2 we have

$$\psi(t) = \rho_{2T}(t) + R_{2T}(\psi,t)$$

where $\rho_{2T}(t)$ is the two-point Taylor interpolating polynomial i.e,

$$\begin{aligned}\rho_{2T}(t) = &\sum_{i=0}^{m-1}\sum_{k=0}^{m-1-i}\binom{m+k-1}{k}\Big[\frac{(t-\alpha)^i}{i!}\Big(\frac{t-\beta}{\alpha-\beta}\Big)^m\Big(\frac{t-\alpha}{\beta-\alpha}\Big)^k\psi^{(i)}(\alpha) \\ &+\frac{(t-\beta)^i}{i!}\Big(\frac{t-\alpha}{\beta-\alpha}\Big)^m\Big(\frac{t-\beta}{\alpha-\beta}\Big)^k\psi^{(i)}(\beta)\Big]\end{aligned}$$

and the remainder $R_{2T}(\psi,t)$ is given by

$$R_{2T}(\psi,t) = \int_\alpha^\beta G_{2T}(t,s)\psi^{(n)}(s)ds$$

with

$$G_{2T}(t,s) = \begin{cases} \frac{(-1)^m}{(2m-1)!}p^m(t,s)\sum\limits_{j=0}^{m-1}\binom{m-1+j}{j}(t-s)^{m-1-j}q^j(t,s), & s\leqslant t; \\ \frac{(-1)^m}{(2m-1)!}q^m(t,s)\sum\limits_{j=0}^{m-1}\binom{m-1+j}{j}(s-t)^{m-1-j}p^j(t,s), & s\geqslant t; \end{cases} \tag{10}$$

where $p(t,s) = \frac{(s-\alpha)(\beta-t)}{\beta-\alpha}$, $q(t,s) = p(t,s), \forall t,s\in[\alpha,\beta]$.

The following Lemma describes the positivity of Green's function (5) see (Beesack [2] and Levin [6]).

LEMMA 1. *The Green's function $G_{H,n}(t,s)$ has the following properties:*

(i) $\frac{G_{H,n}(t,s)}{w(t)} > 0,\ a_1 \leqslant t \leqslant a_r,\ a_1 \leqslant s \leqslant a_r;$

(ii) $G_{H,n}(t,s) \leqslant \frac{1}{(n-1)!(\beta-\alpha)}|w(t)|;$

(iii) $\int_\alpha^\beta G_{H,n}(t,s)ds = \frac{w(t)}{n!}.$

The organization of the paper is as follows: In Section 2, we use Hermite interpolating polynomial and the n-convexity of the function ψ (defined in Theorem 2) to establish a generalization of Theorem 1 for real weights. We discuss the results for particular cases namely, Lagrange interpolating polynomial, $(m, n-m)$ interpolating polynomial, two-point Taylor interpolating polynomial. In Section 3, we present some interesting results about upper bounds by employing Čebyšev functional and Grüss-type inequalities, also results relating to the Ostrowski-type inequality.

2. Popoviciu's inequality by Hermite interpolating polynomial

We begin this section with the proof of our main identity related to generalizations of Popoviciu's inequality.

THEOREM 3. (Main) *Let $z, w \in \mathbb{N}$, $z \geqslant 3$, $2 \leqslant w \leqslant z-1$, $[\alpha,\beta] \subset \mathbb{R}$, $\mathbf{x} = (x_1,\ldots,x_z) \in [\alpha,\beta]^z$, $\mathbf{p} = (p_1,\ldots,p_z)$ be a real z-tuple such that $\sum_{v=1}^{w} p_{u_v} \neq 0$ for any $1 \leqslant u_1 < \ldots < u_w \leqslant z$ $\sum_{u=1}^{z} p_u = 1$ and $\frac{\sum_{v=1}^{w} p_{u_v} x_{u_v}}{\sum_{v=1}^{w} p_{u_v}} \in [\alpha,\beta]$ for any $1 \leqslant u_1 < \ldots < u_w \leqslant z$. Also let $\alpha = a_1 < a_2 \ldots < a_r = \beta$, $(r \geqslant 2)$ be the given points, and $\psi \in C^n([\alpha,\beta])$. Moreover, H_{ij} be the fundamental polynomials of the Hermite basis and $G_{H,n}$ be the green functions as defined by (4) and (5) respectively. Then we have the following identity:*

$$\mathbf{P}(\mathbf{x},\mathbf{p};\psi(x)) = \sum_{j=1}^{r}\sum_{i=0}^{k_j} \psi^{(i)}(a_j)\mathbf{P}(\mathbf{x},\mathbf{p};H_{ij}(x)) + \int_\alpha^\beta \mathbf{P}(\mathbf{x},\mathbf{p};G_{H,n}(x,s))\psi^{(n)}(s)ds. \quad (11)$$

Proof. Using (3) in (2) and following the linearity of $\mathbf{P}(\mathbf{x},\mathbf{p};\cdot)$, we get (11). □

For n-convex functions, we can give the following form of new identity (11).

THEOREM 4. *Let all the assumptions of Theorem 3 be satisfied and ψ be an n-convex function. Then we have the following result:*

If

$$\mathbf{P}(\mathbf{x},\mathbf{p};G_{H,n}(x,s)) \geqslant 0, \quad s \in [\alpha,\beta] \tag{12}$$

then

$$\mathbf{P}(\mathbf{x},\mathbf{p};\psi(x)) \geqslant \sum_{j=1}^{r}\sum_{i=0}^{k_j} \psi^{(i)}(a_j)\mathbf{P}(\mathbf{x},\mathbf{p};H_{ij}(x)). \tag{13}$$

Proof. Since the function ψ is n-convex, therefore without loss of generality we can assume that ψ is n-times differentiable and $\psi^{(n)}(x) \geqslant 0$ for all $x \in [\alpha,\beta]$ (see [10], p. 16). Hence we can apply Theorem 3 to obtain (13). □

REMARK 3. The inequality (13) hold in reverse directions if the inequality in (12) is reversed.

By using Lagrange conditions we can give the following result.

COROLLARY 1. *Let all the assumptions of Theorem 3 be satisfied and G_L be the green function as defined in (6). Also let ψ be n-convex function, then we have the following result:*

If

$$\mathbf{P}(\mathbf{x},\mathbf{p};G_L(x,s)) \geqslant 0, \quad s \in [\alpha,\beta]$$

then

$$\mathbf{P}(\mathbf{x},\mathbf{p};\psi(x)) \geqslant \sum_{j=1}^{n} \psi(a_j)\mathbf{P}\Big(\mathbf{x},\mathbf{p};\prod_{\substack{k=1\\k\neq j}}^{n}\Big(\frac{x-a_k}{a_j-a_k}\Big)\Big). \tag{14}$$

By using type $(m,n-m)$ conditions we can give the following result.

COROLLARY 2. *Let all the assumptions of Theorem 3 be satisfied and $G_{(m,n)}$ be the Green function as defined by (9) and τ_i,η_i be as defined in (7) and (8) respectively. Also let ψ be n-convex function, then we have the following result:*

If

$$\mathbf{P}(\mathbf{x},\mathbf{p};G_{(m,n)}(x,s)) \geqslant 0, \quad s \in [\alpha,\beta]$$

then

$$\mathbf{P}(\mathbf{x},\mathbf{p};\psi(x)) \geqslant \sum_{i=0}^{m-1} \psi^{(i)}(\alpha)\mathbf{P}(\mathbf{x},\mathbf{p};\tau_i(x)) + \sum_{i=0}^{n-m-1} \psi^{(i)}(\beta)\mathbf{P}(\mathbf{x},\mathbf{p};\eta_i(x)).$$

By using Two-point Taylor conditions we can give the following result.

COROLLARY 3. *Let all the assumptions of Theorem 3 be satisfied and G_{2T} be the green function as defined by (10). Also let ψ be n-convex function, then we have the following result:*

If

$$\mathbf{P}(\mathbf{x},\mathbf{p};G_{2T}(x,s)) \geqslant 0, \quad s \in [\alpha,\beta]$$

then

$$\mathbf{P}(\mathbf{x},\mathbf{p};\psi(x)) \geqslant \sum_{i=0}^{m-1}\sum_{k=0}^{m-1-i}\binom{m+k-1}{k}\left[\psi^{(i)}(\alpha)\mathbf{P}\Big(\mathbf{x},\mathbf{p};\frac{(x-\alpha)^i}{i!}\Big(\frac{x-\beta}{\alpha-\beta}\Big)^m\Big(\frac{x-\alpha}{\beta-\alpha}\Big)^k\Big)\right.$$
$$\left.+\psi^{(i)}(\beta)\mathbf{P}\Big(\mathbf{x},\mathbf{p};\frac{(x-\beta)^i}{i!}\Big(\frac{x-\alpha}{\beta-\alpha}\Big)^m\Big(\frac{x-\beta}{\alpha-\beta}\Big)^k\Big)\right].$$

Now we obtain a generalization of Popoviciu's type inequality for z-tuples.

THEOREM 5. *Let in addition to the assumptions of Theorem 3, $\mathbf{p}=(p_1,...,p_z)$ be a positive z-tuple such that $\sum_{u=1}^{z} p_u = 1$, and $\psi:[\alpha,\beta]\to\mathbb{R}$ be an n-convex function. Assume further that the inequality (13) be satisfied and the function*

$$F(x) = \sum_{j=1}^{r}\sum_{i=0}^{k_j}\psi^{(i)}(a_j)H_{ij}(x) \tag{15}$$

is convex. Then we have

$$\mathbf{P}(\mathbf{x},\mathbf{p};\psi(x)) \geqslant 0. \tag{16}$$

Proof. $\mathbf{P}$ is a linear functional, so we can rewrite the R.H.S. of (13) in the form $\mathbf{P}(x,p;F(x))$ where F is defined in (15) and will be obtained after reorganization of this side. Since F is assumed to be convex, therefore using the given conditions and by following Remark 1, the non negativity of the R.H.S. of (13) is immediate and we have (16) for positive z-tuples. □

3. Bounds for identities related to generalization of Popoviciu's inequality

In this section we present some interesting results by using Čebyšev functional and Grüss type inequalities. For two Lebesgue integrable functions $f,h:[\alpha,\beta]\to\mathbb{R}$, we consider the Čebyšev functional

$$\Delta(f,h) = \frac{1}{\beta-\alpha}\int_\alpha^\beta f(t)h(t)dt - \frac{1}{\beta-\alpha}\int_\alpha^\beta f(t)dt.\frac{1}{\beta-\alpha}\int_\alpha^\beta h(t)dt.$$

The following Gr$\ddot{u}$ss type inequalities are given in [4].

THEOREM 6. *Let $f:[\alpha,\beta]\to\mathbb{R}$ be a Lebesgue integrable function and $h:[\alpha,\beta]\to\mathbb{R}$ be an absolutely continuous function with $(.-\alpha)(\beta-.)[h']^2\in L[\alpha,\beta]$. Then we have the inequality*

$$|\Delta(f,h)| \leqslant \frac{1}{\sqrt{2}}[\Delta(f,f)]^{\frac{1}{2}}\frac{1}{\sqrt{\beta-\alpha}}\left(\int_\alpha^\beta (x-\alpha)(\beta-x)[h'(x)]^2dx\right)^{\frac{1}{2}}. \tag{17}$$

The constant $\frac{1}{\sqrt{2}}$ in (17) is the best possible.

THEOREM 7. *Assume that* $h:[\alpha,\beta]\to\mathbb{R}$ *is monotonic nondecreasing on* $[\alpha,\beta]$ *and* $f:[\alpha,\beta]\to\mathbb{R}$ *be an absolutely continuous with* $f'\in L_\infty[\alpha,\beta]$. *Then we have the inequality*

$$|\Delta(f,h)|\leqslant\frac{1}{2(\beta-\alpha)}||f'||_\infty\int_\alpha^\beta(x-\alpha)(\beta-x)dh(x). \tag{18}$$

The constant $\frac{1}{2}$ *in* (18) *is the best possible.*

In the sequel, we consider above theorems to derive generalizations of the results proved in the previous section. In order to avoid many notions let us denote

$$\tilde{\mathfrak{D}}(s)=\mathbf{P}(\mathbf{x},\mathbf{p};G_H(x,s)),\quad s\in[\alpha,\beta]. \tag{19}$$

THEOREM 8. *Let all the assumptions of Theorem 3 be valid with* $-\infty<\alpha<\beta<\infty$ *and* $\alpha=a_1<a_2\ldots<a_r=\beta$, $(r\geqslant 2)$ *be the given points. Moreover,* $\psi\in C^n([\alpha,\beta])$ *such that* $\psi^{(n)}$ *is absolutely continuous with* $(.-\alpha)(\beta-.)[\psi^{(n+1)}]^2\in L[\alpha,\beta]$. *Also let* H_{ij} *be the fundamental polynomials of the Hermite basis and the functions* G_H *and* $\tilde{\mathfrak{D}}$ *be defined by* (5) *and* (19) *respectively. Then*

$$\begin{aligned}\mathbf{P}(\mathbf{x},\mathbf{p};\psi(x)) &= \sum_{j=1}^{r}\sum_{i=0}^{k_j}\psi^{(i)}(a_j)\mathbf{P}(\mathbf{x},\mathbf{p};H_{ij}(x))\\ &\quad+\frac{\psi^{(n-1)}(\beta)-\psi^{(n-1)}(\alpha)}{(\beta-\alpha)}\int_\alpha^\beta\tilde{\mathfrak{D}}(s)ds+\tilde{\mathfrak{K}}_n(\alpha,\beta;\psi).\end{aligned} \tag{20}$$

where the remainder $\tilde{\mathfrak{K}}_n(\alpha,\beta;\psi)$ *satisfy the bound*

$$|\tilde{\mathfrak{K}}_n(\alpha,\beta;\psi)|\leqslant[\Delta(\tilde{\mathfrak{D}},\tilde{\mathfrak{D}})]^{\frac{1}{2}}\sqrt{\frac{\beta-\alpha}{2}}\left|\int_\alpha^\beta(s-\alpha)(\beta-s)[\psi^{(n+1)}(s)]^2ds\right|^{\frac{1}{2}}.$$

Proof. The proof is similar to the Theorem 9 in [3]. □

The following Grüss type inequalities can be obtained by using Theorem 7.

THEOREM 9. *Let all the assumptions of Theorem 3 be valid with* $-\infty<\alpha<\beta<\infty$ *and* $\alpha=a_1<a_2\ldots<a_r=\beta$, $(r\geqslant 2)$ *be the given points. Moreover,* $\psi\in C^n([\alpha,\beta])$ *such that* $\psi^{(n)}$ *is absolutely continuous and let* $\psi^{(n+1)}\geqslant 0$ *on* $[\alpha,\beta]$ *with* $\tilde{\mathfrak{D}}$ *defined in* (19). *Then the representation* (20) *and the remainder* $\tilde{\mathfrak{K}}_n(\alpha,\beta;\psi)$ *satisfies the estimation*

$$|\tilde{\mathfrak{K}}_n(\alpha,\beta;\psi)|\leqslant(\beta-\alpha)||\tilde{\mathfrak{D}}'||_\infty\left[\frac{\psi^{(n-1)}(\beta)+\psi^{(n-1)}(\alpha)}{2}-\frac{\psi^{(n-2)}(\beta)-\psi^{(n-2)}(\alpha)}{(\beta-\alpha)}\right].$$

Proof. The proof is similar to the Theorem [10] in [3]. □

Now we intend to give the Ostrowski type inequalities related to generalizations of Popoviciu's inequality.

THEOREM 10. *Suppose all the assumptions of Theorem 3 be satisfied. Moreover, assume* (p,q) *is a pair of conjugate exponents, that is* $p,q \in [1,\infty]$ *such that* $1/p + 1/q = 1$. *Let* $|\psi^{(n)}|^p : [\alpha,\beta] \to \mathbb{R}$ *be a R-integrable function for some* $n \geqslant 2$. *Then, we have*

$$\left| \mathbf{P}(\mathbf{x},\mathbf{p};\psi(x)) - \sum_{j=1}^{r} \sum_{i=0}^{k_j} \psi^{(i)}(a_j)\mathbf{P}(\mathbf{x},\mathbf{p};H_{ij}(x)) \right|$$
$$\leqslant ||\psi^{(n)}||_p \left(\int_\alpha^\beta \left| \mathbf{P}(\mathbf{x},\mathbf{p};G_H(x,s)) \right|^q ds \right)^{1/q}. \tag{21}$$

The constant on the R.H.S. of (21) *is sharp for* $1 < p \leqslant \infty$ *and the best possible for* $p = 1$, *respectively.*

Proof. The proof is similar to the Theorem 11 in [3]. □

REMARK 4. We can give all the above results of this sections for the Lagrange conditions, Type $(m,n-m)$ conditions, Two-point Taylor conditions.

REMARK 5. Analogous to Section 4 and Section 5 of [3], the n-exponential convexity, mean value theorems and related monotonic Cauchy means (along with examples) can be constructed for the functional defined as the difference between the R.H.S and the L.H.S of the generalized inequality (13).

Acknowledgements. The research of the first and second authors have been supported by Higher Education Commission Pakistan. The research of the third author has been fully supported by Croatian Science Foundation under the project 5435.

REFERENCES

[1] R. P. AGARWAL, P. J. Y. WONG, *Error Inequalities in Polynomial Interpolation and Their Applications*, Kluwer Academic Publishers, Dordrecht/Boston/London, 1993.

[2] P. R. BEESACK, *On the Green's function of an N-point boundary value problem*, Pacific J. Math. **12** (1962), 801–812.

[3] S. I. BUTT, K. A. KHAN AND J. PEČARIĆ, *Popoviciu Type Inequalities via Green Function and Generalized Montgomery Identity*, Math. Inequal. Appl. **18** (4) (2015), 1519–1538.

[4] P. CERONE, S. S. DRAGOMIR, *Some new Ostrowski-type bounds for the Čebyšev functional and applications*, J. Math. Inequal. **8** (1) (2014), 159–170.

[5] L. HORVÁTH, K. A. KHAN AND J. PEČARIĆ, *Combinatorial Improvements of Jensens Inequality / Classical and New Refinements of Jensens Inequality with Applications*, Monographs in inequalities **8**, Element, Zagreb, 2014, pp. 229.

[6] A. YU. LEVIN, *Some problems bearing on the oscillation of solutions of linear differential equations*, Soviet Math. Dokl., **4** (1963), 121–124.

[7] K. A. KHAN, J. PEČARIĆ AND I. PERIĆ, *Differences of weighted mixed symmetric means and related results*, Journal of Inequalities and Applications, **2010**, Article ID 289730, 16 pages, (2010).

[8] K. A. KHAN, J. PEČARIĆ AND I. PERIĆ, *Generalization of Popoviciu Type Inequalities for Symmetric Means Generated by Convex Functions*, J. Math. Comput. Sci., **4** (6) (2014), 1091–1113.

[9] C. P. NICULESCU, *The Integral Version of Popoviciu's Inequality*, J. Math. Inequal. **3** (3) (2009), 323–328.

[10] J. PEČARIĆ, F. PROSCHAN AND Y. L. TONG, *Convex functions, Partial Orderings and Statistical Applications*, Academic Press, New York, 1992.

[11] T. POPOVICIU, *Sur certaines inégalités qui caractérisent les fonctions convexes*, Analele Ştiinţifice Univ. "Al. I. Cuza", Iasi, Secţia Mat. **11** (1965), 155–164.
[12] P. M. VASIĆ AND LJ. R. STANKOVIĆ, *Some inequalities for convex functions*, Math. Balkanica. **6** (44) (1976), 281–288.

(Received March 21, 2016)

Saad Ihsan Butt
Department of Mathematics, COMSATS
Institute of Information Technology
Lahore, Pakistan
e-mail: saadihsanbutt@gmail.com

Khuram Ali Khan
Department of Mathematics, University of Sargodha
40100 Sargodha, Pakistan
e-mail: khuramsms@gmail.com

Josip Pečarić
Faculty of Textile Technology, University of Zagreb
10000 Zagreb, Croatia
e-mail: pecaric@mahazu.hazu.hr

Mathematical
Inequalities
& Applications
Volume 19, Number 4 (2016), 1319–1334 doi:10.7153/mia-19-97

APPLICATIONS OF THE HERMITE–HADAMARD INEQUALITY

MONIKA NOWICKA AND ALFRED WITKOWSKI

(*Communicated by K. Nikodem*)

Abstract. We show how the recent improvement of the Hermite-Hadamard inequality can be applied to some (not necessarily convex) planar figures and three-dimensional bodies satisfying some kind of regularity.

1. Introduction

The classical Hermite-Hadamard inequality [4] states that for a convex function $f\colon [a,b] \to \mathbb{R}$

$$f\left(\frac{a+b}{2}\right) \leqslant \frac{1}{b-a}\int_a^b f(t)\,\mathrm{d}t \leqslant \frac{f(a)+f(b)}{2}. \tag{1}$$

Due to its simple and elegant form it became a natural object of investigations. Neuman and Bessenyei [6, 1] proved the version for simplices saying that if $\Delta \subset \mathbb{R}^n$ is a simplex with barycenter $\mathbf{b}$ and vertices $\mathbf{x}_0,\ldots,\mathbf{x}_n$ and $f\colon \Delta \to \mathbb{R}$ is convex, then

$$f(\mathbf{b}) \leqslant \frac{1}{\mathrm{Vol}(\Delta)}\int_\Delta f(\mathbf{x})\,\mathrm{d}\mathbf{x} \leqslant \frac{f(\mathbf{x}_0)+\ldots+f(\mathbf{x}_n)}{n+1}. \tag{2}$$

The following generalizations for convex function on disk and ball can be found in [3]: If $D(O,R) \subset \mathbb{R}^2$ is a disk and $f\colon D \to \mathbb{R}$ is convex and continuous, then

$$f(O) \leqslant \frac{1}{\pi R^2}\iint\limits_{D(O,R)} f(x,y)\,\mathrm{d}x\,\mathrm{d}y \leqslant \frac{1}{2\pi R}\int\limits_{\partial D(O,R)} f(x,y)\,\mathrm{d}s$$

and If $B(O,R) \subset \mathbb{R}^3$ is a ball and $f\colon B \to \mathbb{R}$ is convex and continuous, then

$$f(O) \leqslant \frac{3}{4\pi R^3}\iiint\limits_{B(O,R)} f(x,y,z)\,\mathrm{d}x\,\mathrm{d}y\,\mathrm{d}z \leqslant \frac{1}{4\pi R^2}\iint\limits_{\partial B(O,R)} f(x,y,z)\,\mathrm{d}S.$$

The stronger version of the right-hand side of (1) ([9, page 140])

$$\frac{1}{b-a}\int_a^b f(t)\,\mathrm{d}t \leqslant \frac{1}{2}\left(f\left(\frac{a+b}{2}\right)+\frac{f(a)+f(b)}{2}\right)$$

Mathematics subject classification (2010): 26D15, 26B15.
Keywords and phrases: Hermite-Hadamard inequality, convex function, polygon, polyhedron, annulus.

Paper MIA-19-97

also received generalizations for simplices [10], disks, 3-balls and regular n-gons P [2]:

$$\frac{1}{\mathrm{Vol}(\Delta)}\int_{\Delta} f(\mathbf{x})\,\mathrm{d}\mathbf{x} \leqslant \frac{1}{n+1}f(\mathbf{b}) + \frac{n}{n+1}\,\frac{f(\mathbf{x}_0)+\ldots+f(\mathbf{x}_n)}{n+1}, \tag{3}$$

$$\frac{1}{\pi R^2}\iint\limits_{D(O,R)} f(x,y)\,\mathrm{d}x\,\mathrm{d}y \leqslant \frac{1}{3}f(O) + \frac{2}{3}\cdot\frac{1}{2\pi R}\int\limits_{\partial D(O,R)} f(x,y)\,\mathrm{d}s,$$

$$\frac{3}{4\pi R^3}\iiint\limits_{B(O,R)} f(x,y,z)\,\mathrm{d}x\,\mathrm{d}y\,\mathrm{d}z \leqslant \frac{1}{4}f(O) + \frac{3}{4}\cdot\frac{1}{4\pi R^2}\iint\limits_{\partial B(O,R)} f(x,y,z)\,\mathrm{d}S,$$

$$\frac{1}{\mathrm{Area}(P)}\iint_P f(x,y)\,\mathrm{d}x\,\mathrm{d}y \leqslant \frac{1}{3}f(O) + \frac{2}{3\,\mathrm{Perim}(P)}\int_{\partial P} f(x,y)\,\mathrm{d}s.$$

In this paper we use the lower and upper estimates for the average of a convex function over a simplex obtained by the authors in [7, 8]. We provide the alternate proof of the above results and then generalize them to figures and bodies satisfying some regularity conditions and to a broader class of functions.

2. Definitions and lemmas

Suppose $\mathbf{x}_0,\ldots,\mathbf{x}_n \in \mathbb{R}^n$ are the vertices of a simplex $\Delta \subset \mathbb{R}^n$.
For a nonempty set $K \subset \{0,\ldots,n\}$ we denote by Δ_K the simplex $\mathrm{conv}\{\mathbf{x}_i : i \in K\}$.
For every set $K \subsetneq \{0,\ldots,n\}$ we denote by $\Delta^{[K]}$ the simplex with vertices

$$\mathbf{x}_j^{[K]} = \frac{1}{n+1}\sum_{i\in K}\mathbf{x}_i + \frac{n+1-k}{n+1}\mathbf{x}_j, \quad j \in \{0,\ldots,n\}\setminus K.$$

We shall denote by $h_{\mathbf{a}}^{\lambda}$ the homothety with center $\mathbf{a}$ and scale λ, i.e. the mapping defined by the formula

$$h_{\mathbf{a}}^{\lambda}(\mathbf{x}) = \mathbf{a} + \lambda(\mathbf{x}-\mathbf{a}).$$

By ∂B we shall denote the boundary of the set B.

REMARK 2.1. In the plane the simplices $\Delta^{[K]}$ are: the triangle (if $K=\emptyset$), intersection of the triangle and a line parallel to one of its sides and passing through its barycenter (if K has one element) and the barycenter itself if K has two elements.

In case of three dimensions we have respectively: the tetrahedron, triangles parallel to its faces, segments parallel to its edges; all of them having the same barycenter.

Note that the simplices $\Delta^{[K]}$ can be obtained by applying homotheties to the faces of Δ. The details are explained in [7].

If $U \subset \mathbb{R}^k$ and $f\colon U \to \mathbb{R}$ is a Riemann integrable function, then by

$$\mathrm{Avg}(f,U) = \frac{1}{\mathrm{Vol}(U)}\int_U f(\mathbf{x})\,\mathrm{d}\mathbf{x}$$

we shall denote its average value over U. For simplicity of notation if $A,B,\dots,Z$ are points and $U=\operatorname{conv}\{A,B,\dots,Z\}$ we shall write $\operatorname{Avg}(f,AB\dots Z)$.

The following results provide the main tools for our investigations:

THEOREM 2.1. ([8]) *Suppose $f\colon \Delta\to\mathbb{R}$ is a convex function and $K,L\subset\{0,\dots,n\}$ are disjoint, nonempty sets. Then*

$$\operatorname{Avg}(f,\Delta_{K\cup L})\leqslant\frac{\operatorname{card}K}{\operatorname{card}K\cup L}\cdot\operatorname{Avg}(f,\Delta_K)+\frac{\operatorname{card}L}{\operatorname{card}K\cup L}\cdot\operatorname{Avg}(f,\Delta_L).$$

THEOREM 2.2. ([7]) *If $K\subset L$ are proper subsets of $\{0,\dots,n\}$ and $f\colon\Delta\to\mathbb{R}$ is a convex function, then*

$$f(\mathbf{b})\leqslant\operatorname{Avg}(f,\Delta^{[L]})\leqslant\operatorname{Avg}(f,\Delta^{[K]})\leqslant\operatorname{Avg}(f,\Delta).$$

The above theorems were proven by Chen [2] in case Δ is a triangle.

In the sequel we shall apply both theorems to some planar and 3-dimensional bodies.

3. Quadrilateral

Bessenyei in [1] proved that if $ABCD$ is a parallelogram and f is a convex function, then $\operatorname{Avg}(f,ABCD)\leqslant\frac{1}{4}(f(A)+f(B)+f(C)+f(D))$.

We will try to generalize and improve this result.

Consider a quadrilateral $ABCD$ such that the segment AC divides its area evenly (see Figure 1a).

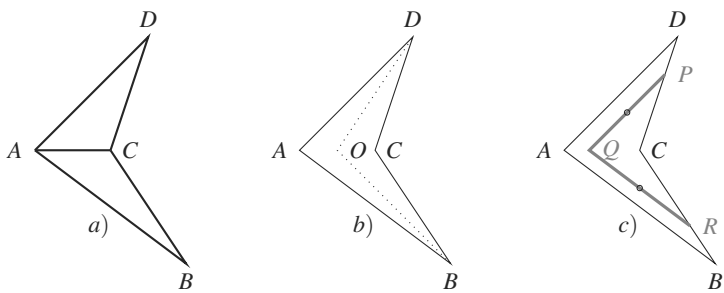

Figure 1: *Quadrilateral with equal halves*

We can apply Theorem 2.1 to both triangles ABC and ADC to obtain

$$\operatorname{Avg}(f,ABC)\leqslant\frac{1}{3}f(B)+\frac{2}{3}\operatorname{Avg}(f,AC),\tag{4}$$

$$\operatorname{Avg}(f,ACD)\leqslant\frac{1}{3}f(D)+\frac{2}{3}\operatorname{Avg}(f,AC),\tag{5}$$

which yields

$$\begin{aligned}\operatorname{Avg}(f,ABCD) &\leqslant \frac{1}{3}\left(\frac{f(B)+f(D)}{2}+2\operatorname{Avg}(f,AC)\right) \\ &\leqslant \frac{1}{3}\left(\frac{f(B)+f(D)}{2}+f(A)+f(C)\right).\end{aligned} \tag{6}$$

By adding a midpoint O of the segment AC we can get another upper bound (see Figure 1b):

$$\begin{aligned}\operatorname{Avg}(f,AOB) &\leqslant \frac{1}{3}f(O)+\frac{2}{3}\operatorname{Avg}(f,AB)\\ \operatorname{Avg}(f,BOC) &\leqslant \frac{1}{3}f(O)+\frac{2}{3}\operatorname{Avg}(f,BC)\\ \operatorname{Avg}(f,COD) &\leqslant \frac{1}{3}f(O)+\frac{2}{3}\operatorname{Avg}(f,CD)\\ \operatorname{Avg}(f,DOA) &\leqslant \frac{1}{3}f(O)+\frac{2}{3}\operatorname{Avg}(f,DA)\end{aligned}$$

and since the four triangles have the same area this produces

$$\operatorname{Avg}(f,ABCD) \leqslant \frac{f(O)}{3}+\frac{2}{3}\frac{\operatorname{Avg}(f,AB)+\operatorname{Avg}(f,BC)+\operatorname{Avg}(f,CD)+\operatorname{Avg}(f,DA)}{4} \tag{7}$$

$$\leqslant \frac{f(O)}{3}+\frac{2}{3}\frac{f(A)+f(B)+f(C)+f(D)}{4}. \tag{8}$$

Thus we have proven the following

THEOREM 3.1. *Let $ABCD$ be a quadrilateral such that the segment AC divides it into two triangles of equal area and O be the midpoint of AC. If $f\colon ABCD \to \mathbb{R}$ is such that its restrictions to triangles ABC and ACD are convex, then the inequalities* (6), (7) *and* (8) *hold.*

To obtain the lower bound we apply Theorem 2.2 to both triangles ABC and ADC. By Remark 2.1 we have four reasonable choices for each triangle, so we can produce 16 inequalities. An example is shown on the Figure 1c: the segments $PQ = h_C^{2/3}(DA)$ and $QR = h_C^{2/3}(AB)$ pass through the barycenters of both triangles and therefore $\operatorname{Avg}(f,PQ) \leqslant \operatorname{Avg}(f,ACD)$ and $\operatorname{Avg}(f,QR) \leqslant \operatorname{Avg}(f,ABC)$, which leads to

$$\frac{\operatorname{Avg}(f,PQ)+\operatorname{Avg}(f,QR)}{2} \leqslant \operatorname{Avg}(f,ABCD).$$

The reader will easily find two other pairs of segments for which Theorem 2.2 can be applied.

A parallelogram offers more opportunities: firstly, we obtain inequalities (4) and (5) with BD and AC swapped thus obtaining an improvement of Bessenyei's result

THEOREM 3.2. *Let $ABCD$ be a parallelogram with center O and $f\colon ABCD \to \mathbb{R}$ be such that its restrictions to triangles AOB, BOC, COD and DOA are convex, then the inequalities (7) and (8) hold and additionally*

$$\begin{aligned}\operatorname{Avg}(f,ABCD) &\leqslant \frac{1}{3}\min\left\{\tfrac{f(B)+f(D)}{2}+2\operatorname{Avg}(f,AC),\tfrac{f(A)+f(C)}{2}+2\operatorname{Avg}(f,BD)\right\}\\ &\leqslant \frac{1}{3}\min\left\{\tfrac{f(B)+f(D)}{2}+f(A)+f(C),\tfrac{f(A)+f(C)}{2}+f(B)+f(C)\right\}\\ &\leqslant \tfrac{f(A)+f(B)+f(C)+f(D)}{4}.\end{aligned}$$

The fact that the parallelogram can be divided into four triangles of equal area opens new opportunities. For example we can apply Theorem 2.1 to AOB (and then cyclically to others) as follows:

$$\operatorname{Avg}(f,AOB) \leqslant \frac{1}{3}f(A)+\frac{2}{3}\operatorname{Avg}(f,OB).$$

Summing and taking into account that the point O halves both diagonals we get

THEOREM 3.3. *Under the assumption of Theorem 3.2*

$$\operatorname{Avg}(f,ABCD) \leqslant \frac{1}{3}\frac{f(A)+f(B)+f(C)+f(D)}{4}+\frac{2}{3}\frac{\operatorname{Avg}(f,AC)+\operatorname{Avg}(f,BD)}{2}.$$

The reader will find more estimates applicable to parallelograms and rhombus in Section 4 devoted to polygons.

As above using Theorem 2.2 we can produce 64 different lower bounds. Figure 2 illustrates two, probably the most spectacular, inequalities:

THEOREM 3.4. *Under the assumption of Theorem 3.2 let $A'B'C'D' = h_O^{2/3}(ABCD)$, $KL = h_D^{2/3}(AO)$, $LM = h_D^{2/3}(OC)$, $PQ = h_B^{2/3}(AO)$, $QR = h_B^{2/3}(OC)$. Then the following inequalities hold (see Figure 2)*

$$\frac{\operatorname{Avg}(f,KL)+\operatorname{Avg}(f,LM)+\operatorname{Avg}(f,PQ)+\operatorname{Avg}(f,QR)}{4} \leqslant \operatorname{Avg}(f,ABCD),$$

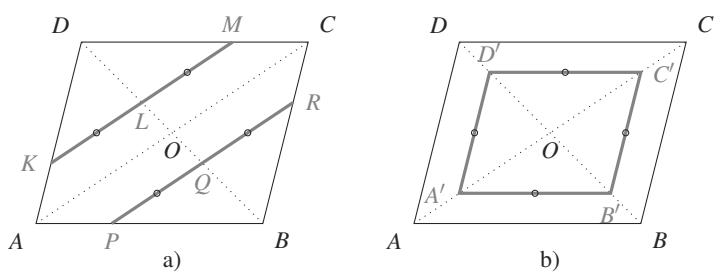

Figure 2: *Lower bounds for parallelogram*

$$\frac{\mathrm{Avg}(f,A'B')+\mathrm{Avg}(f,B'C')+\mathrm{Avg}(f,C'D')+\mathrm{Avg}(f,D'A')}{4}\leqslant \mathrm{Avg}(f,ABCD).$$

REMARK 3.1. If f is convex on the parallelogram, then obviously f is convex on all four triangles. The converse does not hold. In both cases one can easily conclude the inequality

$$\frac{1}{4}\sum_{k=1}^{4} f(O_k)\leqslant \mathrm{Avg}(f,ABCD),$$

where O_k's are the barycenters of the triangles. This inequality in case of convex f yields $f(O)\leqslant \mathrm{Avg}(f,ABCD)$. In the case of convexity on triangles only this may not be true (consider the quadrilateral $\{(x,y):|x|+|y|=1\}$ and $f(x,y)=-|y|$).

4. Fans and n-gons

We shall call *nice* a star-shaped polygon P with vertices $A_0,\dots,A_{n-1}$ satisfying the following condition: there exists a point O called *center* in the kernel of P such that all triangles OA_kA_{k+1}, $k=0,\dots,n-1$ are of the same area. If additionally all segments A_kA_{k+1} are of the same length, then we shall call it *very nice*.

Regular n-gons are very nice, but the class of nice and very nice polygons is much broader.

THEOREM 4.1. *If P is a nice polygon and $f:P\to\mathbb{R}$ is convex on every triangle formed by its center O and two consecutive vertices, then*

$$\mathrm{Avg}(f,P)\leqslant \frac{1}{3}f(O)+\frac{2}{3}\cdot\frac{1}{n}\sum_{k=0}^{n-1}\mathrm{Avg}(f,A_kA_{k+1}), \tag{9}$$

$$\mathrm{Avg}(f,P)\leqslant \frac{1}{3}\cdot\frac{1}{n}\sum_{k=0}^{n-1}f(A_k)+\frac{2}{3}\cdot\frac{1}{n}\sum_{k=0}^{n-1}\mathrm{Avg}(f,OA_k), \tag{10}$$

$$\mathrm{Avg}(f,P)\leqslant \frac{1}{3}f(O)+\frac{2}{3}\cdot\frac{1}{n}\sum_{k=0}^{n-1}f(A_k). \tag{11}$$

If additionally $A'_k=h_O^{2/3}(A_k)$ for $k=0,\dots,n-1$, then

$$\frac{1}{n}\sum_{k=0}^{n-1}\mathrm{Avg}(f,A'_kA'_{k+1})\leqslant \mathrm{Avg}(f,P) \tag{12}$$

(see Figure 3).

Proof. To obtain (9) apply Theorem 2.1 to vertex O and side A_kA_{k+1}, then add up the inequalities. Similarly, for (10) use vertex A_k and side OA_{k+1}. The inequality (11) can be obtained from (9) or (10) by applying standard Hermite-Hadamard inequalities.

Finally (12) is consequence of Theorem 2.2. $\square$

REMARK 4.1. Every triangle is a nice polygon with its barycenter as O.

REMARK 4.2. In case of a very nice polygon, the inequalities (9) and (12) can be written as

$$\mathrm{Avg}(f,\partial h_O^{2/3}(P)) \leqslant \mathrm{Avg}(f,P) \leqslant \frac{1}{3}f(O)+\frac{2}{3}\mathrm{Avg}(f,\partial P).$$

Suppose n is even. Then we can group the triangles in pairs to get

$$\mathrm{Avg}(f,OA_kA_{k+1}) \leqslant \frac{1}{3}f(A_{k+1})+\frac{2}{3}\mathrm{Avg}(f,OA_k)$$
$$\mathrm{Avg}(f,OA_{k-1}A_k) \leqslant \frac{1}{3}f(A_{k-1})+\frac{2}{3}\mathrm{Avg}(f,OA_k).$$

This shows that the following result holds true.

THEOREM 4.2. *Under assumptions of Theorem 4.1 if the number of vertices of P is even, then*

$$\mathrm{Avg}(f,P) \leqslant \frac{1}{3}\frac{1}{n/2}\sum_{k\ odd} f(A_k)+\frac{2}{3}\frac{1}{n/2}\sum_{k\ even}\mathrm{Avg}(f,OA_k),$$
$$\mathrm{Avg}(f,P) \leqslant \frac{1}{3}\frac{1}{n/2}\sum_{k\ even} f(A_k)+\frac{2}{3}\frac{1}{n/2}\sum_{k\ odd}\mathrm{Avg}(f,OA_k),$$

(see Figure 3).

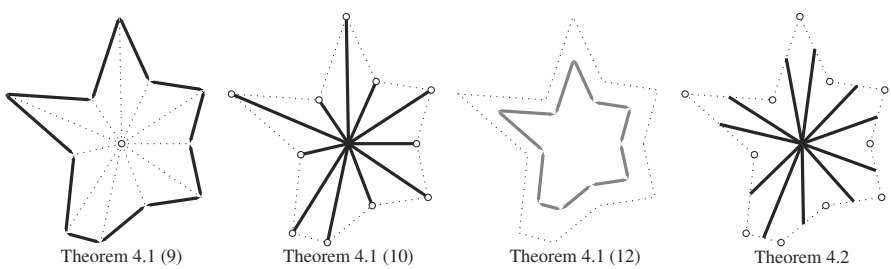

Figure 3: *Hermite-Hadamard inequalities for n-gon*

REMARK 4.3. Note that every nice n-gon can be considered a nice $2n$-gon by adding the midpoints of its sides to the set of vertices (see Figure 3).

Remark 3.1 remains valid also in this case.

A fan is a polygon with vertices $O,A_1,\dots,A_n$ such that all triangles OA_kA_{k+1}, $k=1,\dots,n-1$ are of the same orientation and $\sum_{k=1}^{n-1}\angle A_kOA_{k+1}<2\pi$. For nice fans we obtain similar results as for nice n-gons. We encourage the reader to formulate an equivalent of Theorems 4.1 and 4.2.

5. Annulus

In [2] the following version of Hermite-Hadamard inequality can be found

THEOREM 5.1. ([2], Th. 2.2) *Let U be a convex subset of a plane, and $D \subset U$ be an annulus with radii $r < R$ and $C(s)$ denotes a co-centric circle with radius s, then for a convex function $f\colon U \to \mathbb{R}$ hold*

$$\operatorname{Avg}\left(f, C\left(\tfrac{2(r^2+rR+R^2)}{3(r+R)}\right)\right) \leqslant \operatorname{Avg}(f,D)$$

and

$$\operatorname{Avg}(f,D) \leqslant \frac{2r+R}{3(r+R)}\operatorname{Avg}(f,C(r)) + \frac{r+2R}{3(r+R)}\operatorname{Avg}(f,C(R)).$$

We shall improve this result. For $n > 4$ let A_k^n, $k = 0,\dots,n-1$ be the vertices of a regular n-gon inscribed in $C(R)$ and B_k^n, $k = 0,\dots,n-1$ be the vertices of a regular n-gon inscribed in $C(r)$ and rotated anticlockwise by $\frac{\pi}{n}$. The two polygons bound the area D_n, and divide it into $2n$ isosceles triangles $\mathscr{K}_k^n = A_k^n A_{k+1}^n B_k^n$ and $\mathscr{L}_k^n = B_k^n B_{k+1}^n A_{k+1}^n$. We have

$$\operatorname{Area}\mathscr{K}_k^n = R\sin\frac{\pi}{n}\left(R\cos\frac{\pi}{n} - r\right), \quad \operatorname{Area}\mathscr{L}_k^n = r\sin\frac{\pi}{n}\left(R - r\cos\frac{\pi}{n}\right), \tag{13}$$

$$\operatorname{Area}D_n = \sum_{k=0}^{n-1}(\operatorname{Area}\mathscr{K}_k^n + \operatorname{Area}\mathscr{L}_k^n) = n\sin\frac{\pi}{n}\cos\frac{\pi}{n}(R^2 - r^2). \tag{14}$$

Denote by K_k^n, L_k^n the barycenters of $\mathscr{K}_k^n$ and $\mathscr{L}_k^n$. Applying the Hermite-Hadamard inequality, equations (13) and (14) we obtain

$$\begin{aligned}
\operatorname{Avg}(f,D_n) &= \frac{1}{\operatorname{Area}D_n}\sum_{k=0}^{n-1}\left(\int_{\mathscr{K}_k^n} f(\mathbf{x})\,\mathrm{d}\mathbf{x} + \int_{\mathscr{L}_k^n} f(\mathbf{x})\,\mathrm{d}\mathbf{x}\right)\\
&= \sum_{k=0}^{n-1}\left(\frac{\operatorname{Area}\mathscr{K}_k^n}{\operatorname{Area}D_n}\operatorname{Avg}(f,\mathscr{K}_k^n) + \frac{\operatorname{Area}\mathscr{L}_k^n}{\operatorname{Area}D_n}\operatorname{Avg}(f,\mathscr{L}_k^n)\right)\\
&\geqslant \frac{R\left(R\cos\frac{\pi}{n} - r\right)}{\cos\frac{\pi}{n}(R^2-r^2)}\frac{1}{n}\sum_{k=0}^{n-1} f(K_k^n) + \frac{r\left(R - r\cos\frac{\pi}{n}\right)}{\cos\frac{\pi}{n}(R^2-r^2)}\frac{1}{n}\sum_{k=0}^{n-1} f(L_k^n).
\end{aligned} \tag{15}$$

As n tends to infinity the two regular polygons with vertices K_k^n and L_k^n respectively approach the circles of radii $\frac{1}{3}(2R+r)$ and $\frac{1}{3}(R+2r)$, and the arithmetic means in (15) tend to averages of f over these circles, so we have proven the following fact.

THEOREM 5.2. *Under the assumptions of Theorem 5.1 the inequality*

$$\frac{R}{r+R}\operatorname{Avg}\left(f, C\left(\frac{r+2R}{3}\right)\right) + \frac{r}{r+R}\operatorname{Avg}\left(f, C\left(\frac{2r+R}{3}\right)\right) \leqslant \operatorname{Avg}(f,D)$$

holds.

Similar reasoning and the strengthened version of the Hermite-Hadamard inequality (3) applied to $\mathscr{K}_k^n$ and $\mathscr{L}_k^n$ produce a better right bound.

THEOREM 5.3. *Under the assumptions of Theorem 5.1 the inequality*

$$\begin{aligned}\operatorname{Avg}(f,D) \leqslant \frac{1}{3}\left[\frac{R}{r+R}\operatorname{Avg}\left(f,C\left(\frac{r+2R}{3}\right)\right)+\frac{r}{r+R}\operatorname{Avg}\left(f,C\left(\frac{2r+R}{3}\right)\right)\right]\\ +\frac{2}{3}\left[\frac{r+2R}{3(r+R)}\operatorname{Avg}(f,C(R))+\frac{2r+R}{3(r+R)}\operatorname{Avg}(f,C(r))\right]\end{aligned}$$

holds.

REMARK 5.1. Suppose the function f is such there exist a point $O \in U$ and half-lines starting from O such that f is convex in each sector bounded by them. Then, if O is the center of D, the inequalities in (15) are valid for all triangles except these intersecting with the sectors' boundaries. Thus they can be neglected as n tends to infinity, and the Theorems 5.2 and 5.3 remain valid for f.

6. Platonic bodies and related polytopes

Let $B \subset \mathbb{R}^3$ be a platonic body inscribed in a sphere with center O. Define the following sets:

- $\mathscr{S}$ – set of segments joining O with vertices of B
- $\mathscr{O}$ – set of segments joining O with centers of faces
- $\mathscr{E}$ – set of edges of B
- $\mathscr{D}$ – set of segments joining centers of faces with their vertices.

THEOREM 6.1. *Let $f\colon B \to \mathbb{R}$ be a function such that its restriction to every pyramid formed by a face as a base and O as its apex is convex. Then with the above notation the following inequalities hold:*

$$\operatorname{Avg}(f,B) \leqslant \frac{1}{4}f(O)+\frac{3}{4}\operatorname{Avg}(f,\partial B), \tag{16}$$

$$\operatorname{Avg}(f,B) \leqslant \frac{1}{2}\operatorname{Avg}(f,\mathscr{O})+\frac{1}{2}\operatorname{Avg}(f,\mathscr{E}), \tag{17}$$

$$\operatorname{Avg}(f,B) \leqslant \frac{1}{2}\operatorname{Avg}(f,\mathscr{S})+\frac{1}{2}\operatorname{Avg}(f,\mathscr{D}), \tag{18}$$

and

$$\operatorname{Avg}(f,\partial h_O^{3/4}(B)) \leqslant \operatorname{Avg}(f,B). \tag{19}$$

Proof. Let F be a face of B with vertices $A_0,\dots,A_{n-1}$ and O' be its circumcenter. Split the pyramid FO into simplices $OO'A_kA_{k+1}$. Applying Theorem 2.1 we obtain

$$\operatorname{Avg}(f,OO'A_kA_{k+1}) \leqslant \frac{1}{4}f(O)+\frac{3}{4}\operatorname{Avg}(f,O'A_kA_{k+1}).$$

Summing over k and F we obtain (16). The inequalities

$$\operatorname{Avg}(f,OO'A_kA_{k+1}) \leqslant \frac{1}{2}\operatorname{Avg}(f,OO')+\frac{1}{2}\operatorname{Avg}(f,A_kA_{k+1})$$

lead to (17), while

$$\operatorname{Avg}(f,OO'A_kA_{k+1}) \leqslant \frac{1}{2}\operatorname{Avg}(f,OA_k)+\frac{1}{2}\operatorname{Avg}(f,O'A_{k+1})$$

give (18). Finally Theorem 2.2 leads to the inequalities

$$\operatorname{Avg}(f,h_O^{3/4}(O'A_kA_{k+1})) \leqslant \operatorname{Avg}(f,OO'A_kA_{k+1})$$

that finally yield (19). $\square$

Based on a platonic body B we can build a new polytope B^* in the following way: on every face F of B we build or excavate a regular pyramid of the same height with apex O_F. If we denote by

- $\mathscr{S}$ – set of segments joining O with vertices of B,
- $\mathscr{O}^*$ – set of segments joining O with O_F's,
- $\mathscr{E}$ – set of edges of B,
- $\mathscr{D}^*$ – set of segments joining O_F's of the pyramids with vertices of F,

then the same reasoning as above shows that the next theorem is valid.

THEOREM 6.2. *Let $f\colon B^*\to\mathbb{R}$ be a function such that its restriction to every tetrahedron formed by O, O_F and two adjacent vertices of F. Then with the above notation the following inequalities hold:*

$$\begin{aligned}
\operatorname{Avg}(f,B^*) &\leqslant \frac{1}{4}f(O)+\frac{3}{4}\operatorname{Avg}(f,\partial B^*),\\
\operatorname{Avg}(f,B^*) &\leqslant \frac{1}{2}\operatorname{Avg}(f,\mathscr{O}^*)+\frac{1}{2}\operatorname{Avg}(f,\mathscr{E}),\\
\operatorname{Avg}(f,B^*) &\leqslant \frac{1}{2}\operatorname{Avg}(f,\mathscr{S})+\frac{1}{2}\operatorname{Avg}(f,\mathscr{D}^*),
\end{aligned}$$

and

$$\operatorname{Avg}(f,\partial h_O^{3/4}(B^*)) \leqslant \operatorname{Avg}(f,B^*).$$

7. Dipyramid and dicone

Let P be a regular, convex n-gon with vertices $A_0,\dots,A_{n-1}$. Suppose X is a point on the line l perpendicular to the plane containing P and passing through its center. The set $\mathscr{U}_X=\bigcup_{k=0}^{n-1}XA_kA_{k+1}$ will be called a *Chinese umbrella with vertex* X. The umbrella's scaffold will be denoted by $\mathscr{S}_X=\bigcup_{k=0}^{n-1}XA_k$.

By a *dipyramid* with vertices O_0,O_1 we mean the body $\mathscr{D}$ bounded by two Chinese umbrellas $\mathscr{U}_{O_0}$ and $\mathscr{U}_{O_1}$. The dipyramid may be convex or not, depending on the position of its vertices with respect to the plane of the polygon.

The following result is a consequence of Theorems 2.1 and 2.2.

THEOREM 7.1. *Let $\mathscr{D}$ be a dipyramid with vertices O_0 and O_1, and let $f:\mathscr{D}\to\mathbb{R}$ be a function that is convex on every simplex $O_0O_1A_kA_{k+1}$, $k=0,\dots,n-1$. Then*

$$\operatorname{Avg}(f,\mathscr{D})\leqslant\tfrac{1}{4}f(O_0)+\tfrac{3}{4}\operatorname{Avg}(f,\mathscr{U}_{O_1}),\tag{20}$$

$$\operatorname{Avg}(f,\mathscr{D})\leqslant\tfrac{1}{4}f(O_1)+\tfrac{3}{4}\operatorname{Avg}(f,\mathscr{U}_{O_0}),\tag{21}$$

$$\operatorname{Avg}(f,h_{O_0}^{3/4}(\mathscr{U}_{O_1}))\leqslant\operatorname{Avg}(f,\mathscr{D}),\tag{22}$$

$$\operatorname{Avg}(f,h_{O_1}^{3/4}(\mathscr{U}_{O_0}))\leqslant\operatorname{Avg}(f,\mathscr{D}),\tag{23}$$

$$\operatorname{Avg}(f,\mathscr{D})\leqslant\tfrac{1}{2}\left(\operatorname{Avg}(f,O_0O_1)+\operatorname{Avg}(f,\partial P)\right),\tag{24}$$

$$\operatorname{Avg}(f,\mathscr{D})\leqslant\tfrac{1}{2}\left(\operatorname{Avg}(f,\mathscr{S}_{O_0})+\operatorname{Avg}(f,\mathscr{S}_{O_1})\right),\tag{25}$$

(see Figure 4).

Proof. Grouping the vertices of the simplex $O_0O_1A_kA_{k+1}$ into $\{O_0\},\{O_1A_kA_{k+1}\}$ one gets the inequalities (20) and (22). Similar split $\{O_1\},\{O_0A_kA_{k+1}\}$ gives (21) and (23).

Inequalities (24) and (25) follow by grouping them into $\{O_0O_1\}$, $\{A_kA_{k+1}\}$ and $\{O_0A_k\}$, $\{O_1A_{k+1}\}$ respectively. □

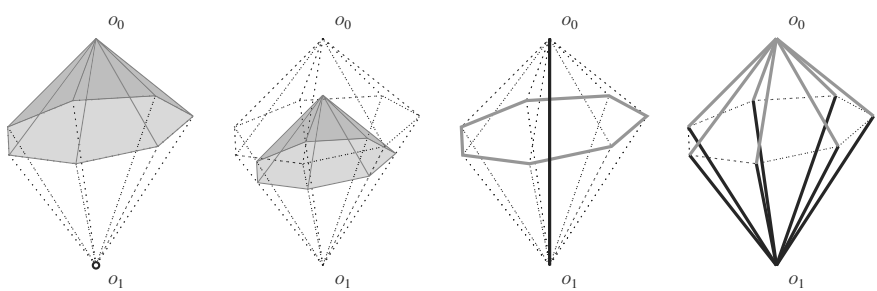

Figure 4: *Hermite-Hadamard inequalities for dipyramid*

Denote by η_i, $i=0,1$ the angle between the line l and the plane of a side of $\mathscr{U}_{O_i}$ and for $0<s<1$ let $O_s=(1-s)O_0+sO_1$. The umbrella $\mathscr{U}_{O_s}$ splits the dipyramid $\mathscr{D}$ into two dipyramids $\mathscr{D}_s^0$ and $\mathscr{D}_s^1$ with vertices O_0,O_s and O_1,O_s respectively. It is clear, that

$$\mathrm{Vol}(\mathscr{D}_s^0)=s\mathrm{Vol}(\mathscr{D}) \quad \text{and} \quad \mathrm{Vol}(\mathscr{D}_s^1)=(1-s)\mathrm{Vol}(\mathscr{D}). \tag{26}$$

Note also that

$$\frac{\mathrm{Area}(\mathscr{U}_{O_0})}{\mathrm{Area}(\mathscr{U}_{O_1})}=\frac{\sin\eta_1}{\sin\eta_0}$$

which gives

$$\mathrm{Area}(\partial\mathscr{D})=\frac{\sin\eta_0+\sin\eta_1}{\sin\eta_1}\,\mathrm{Area}(\mathscr{U}_{O_0})=\frac{\sin\eta_0+\sin\eta_1}{\sin\eta_0}\,\mathrm{Area}(\mathscr{U}_{O_1}). \tag{27}$$

Now we are ready to generalize the results of Theorem 7.1.

THEOREM 7.2. *Under the assumptions of Theorem 7.1 for all* $0<s<1$ *the inequalities*

$$\mathrm{Avg}(f,\mathscr{D})\leqslant \tfrac{1}{4}f(O_s)+\tfrac{3}{4}\left(s\,\mathrm{Avg}(f,\mathscr{U}_{O_0})+(1-s)\,\mathrm{Avg}(f,\mathscr{U}_{O_1})\right), \tag{28}$$

$$s\,\mathrm{Avg}(f,h_{O_s}^{3/4}(\mathscr{U}_{O_0}))+(1-s)\,\mathrm{Avg}(f,h_{O_s}^{3/4}(\mathscr{U}_{O_1}))\leqslant \mathrm{Avg}(f,\mathscr{D}), \tag{29}$$

$$\mathrm{Avg}(f,\partial h_{O_s}^{3/4}(\mathscr{D}))\leqslant \frac{\sin\eta_1\,\mathrm{Avg}(f,\mathscr{D}_s^0)}{\sin\eta_0+\sin\eta_1}+\frac{\sin\eta_0\,\mathrm{Avg}(f,\mathscr{D}_s^1)}{\sin\eta_0+\sin\eta_1} \tag{30}$$

are valid.

Proof. To prove (28) we apply inequality (20) to $\mathscr{D}_s^0$ and to $\mathscr{D}_s^1$ and obtain

$$\begin{aligned}\mathrm{Avg}(f,\mathscr{D}_s^0)&\leqslant \tfrac{1}{4}f(O_s)+\tfrac{3}{4}\,\mathrm{Avg}(f,\mathscr{U}_{O_0}),\\ \mathrm{Avg}(f,\mathscr{D}_s^1)&\leqslant \tfrac{1}{4}f(O_s)+\tfrac{3}{4}\,\mathrm{Avg}(f,\mathscr{U}_{O_1}).\end{aligned}$$

Now we multiply the first inequality by s, the second by $1-s$ and add up both inequalities taking into account equalities (26).

The proof of (29) is similar but uses (22) and (23).

And finally from (22), (23) and (27) (which remains valid for homothetic images also) it follows that

$$\frac{\sin\eta_0+\sin\eta_1}{\sin\eta_{1-i}}\,\frac{1}{\mathrm{Area}(\partial h_{O_s}^{3/4}(\mathscr{D}))}\int_{h_{O_s}^{3/4}(\mathscr{U}_{O_i})} f(\mathbf{x})\,\mathrm{d}\mathbf{x}\leqslant \mathrm{Avg}(f,\mathscr{D}_s^i),\quad i=0,1.$$

We complete the proof by dividing these inequalities by the first term and adding side by side, because $\partial h_{O_s}^{3/4}(\mathscr{D})=h_{O_s}^{3/4}(\mathscr{U}_{O_0})\cup h_{O_s}^{3/4}(\mathscr{U}_{O_1})$. $\square$

COROLLARY 7.3. *Let* $s^* = \frac{\sin\eta_0}{\sin\eta_0+\sin\eta_1}$. *The equations* (27), (26) *and Theorem* 7.2 *imply that*

$$\operatorname{Avg}(f,\mathscr{D}) \leqslant \tfrac{1}{4}f(O_{s^*}) + \tfrac{3}{4}\operatorname{Avg}(f,\partial\mathscr{D}),$$
$$\operatorname{Avg}(f,\partial h^{3/4}_{O_{s^*}}(\mathscr{D})) \leqslant \operatorname{Avg}(f,\mathscr{D}).$$

With n growing to infinity our dipyramids approximate a *dicone*, where the n-gon P gets replaced by a circle of radius R. All formulas (20)–(24), (28)–(30) remain valid, while the formula (25) needs a modification.

Let us introduce a coordinate system in the most natural way (center O at the center of P, z-axis along the line l and x-axis along OA_0). Then we have

$$\operatorname{Avg}(f,\mathscr{S}_{O_0}) = \frac{1}{n|O_0A_0|}\sum_{k=0}^{n-1}\int_{O_0A_k} f(x,y,z)\,\mathrm{d}l$$

with $x = r\cos\varphi,\ y = r\sin\varphi,\ z = (R-r)\cot\eta_0,\ 0 \leqslant r \leqslant R$

$$\begin{aligned}
&= \frac{1}{nR}\sum_{k=0}^{n-1}\int_0^R f\left(r\cos\tfrac{2\pi k}{n}, r\sin\tfrac{2\pi k}{n}, (R-r)\cot\eta_0\right)\mathrm{d}r\\
&\to \frac{1}{2\pi R}\int_0^R\int_0^{2\pi} f\left(r\cos\varphi, r\sin\varphi, (R-r)\cot\eta_0\right)\mathrm{d}\varphi\,\mathrm{d}r\\
&= \frac{1}{2\pi R}\iint\limits_{x^2+y^2\leqslant R^2} f\left(x,y,(R-\sqrt{x^2+y^2})\cot\eta_0\right)\frac{1}{\sqrt{x^2+y^2}}\,\mathrm{d}x\,\mathrm{d}y\\
&= \frac{\sin\eta_0}{2\pi R}\iint\limits_{\mathscr{U}_{O_0}} \frac{f(x,y,z)}{\sqrt{x^2+y^2}}\,\mathrm{d}S.
\end{aligned}$$

Therefore the following result holds.

THEOREM 7.4. *If* f *is a convex function defined on a dicone* $\mathscr{D}$, *and* $g(\mathbf{x}) = \frac{f(\mathbf{x})}{\operatorname{dist}(\mathbf{x},l)}$ *(*$\operatorname{dist}(\mathbf{x},l)$ *denotes the distance from* $\mathbf{x}$ *to the line* l*), then*

$$\operatorname{Avg}(f,\mathscr{D}) \leqslant \frac{R}{4}\left(\operatorname{Avg}(g,\mathscr{U}_{O_0}) + \operatorname{Avg}(g,\mathscr{U}_{O_1})\right).$$

8. Cube

A cube being a Platonic body enjoys all properties discussed in Section 6. In this section we present a handful of other applications of Theorems 2.1 and 2.2.

THEOREM 8.1. *Let* $\mathscr{C}$ *be a cube, and* $f\colon \mathscr{C} \to \mathbb{R}$ *be a function convex on every pyramid formed by a face and the center* O *of the cube. Fix two opposite vertices of a cube and let* P *be a set being the sum of six diagonals of faces meeting at these vertices. Let* Q *be the set of three main diagonals joining the remaining six vertices. Then*

$$\operatorname{Avg}(f,\mathscr{C}) \leqslant \frac{1}{2}\operatorname{Avg}(f,P) + \frac{1}{2}\operatorname{Avg}(f,Q).$$

Proof. Let $ABCD$ be the face containing diagonal AC in P. The pyramid $ABCDO$ is the sum of two simplices $ABCO$ and $ACDO$. Splitting vertices of each of them into groups $\{AC\},\{BO\}$ and $\{AC\},\{DO\}$ respectively one gets

$$\operatorname{Avg}(f,ABCO) \leqslant \frac{1}{2}\left(\operatorname{Avg}(f,AC)+\operatorname{Avg}(f,BO)\right)$$
$$\operatorname{Avg}(f,ACDO) \leqslant \frac{1}{2}\left(\operatorname{Avg}(f,AC)+\operatorname{Avg}(f,DO)\right)$$

which gives

$$2\operatorname{Avg}(f,ABCDO) \leqslant \operatorname{Avg}(f,AC)+\frac{1}{2}(\operatorname{Avg}(f,BO)+\operatorname{Avg}(f,DO)).$$

We complete the proof in usual way, applying the same process to all diagonals in P. $\square$

THEOREM 8.2. *Let $\mathscr{C}$ be a cube, and $f\colon \mathscr{C}\to\mathbb{R}$ be a function convex on every pyramid formed by a face and the center O of the cube. Fix two opposite vertices of $\mathscr{C}$ and let S be a set being the sum of edges meeting at these vertices. Let Q be the set of three main diagonals joining the remaining six vertices. Then*

$$\operatorname{Avg}(f,\mathscr{C}) \leqslant \frac{1}{2}\operatorname{Avg}(f,S)+\frac{1}{2}\operatorname{Avg}(f,Q).$$

Proof. The proof goes exactly the same way as the previous one, but this time we split the vertices of simplices into groups $\{CO\},\{AB\}$ and $\{CO\},\{AD\}$ respectively which leads to

$$2\operatorname{Avg}(f,ABCDO) \leqslant \operatorname{Avg}(f,OC)+\frac{1}{2}(\operatorname{Avg}(f,AB)+\operatorname{Avg}(f,AD)). \quad \square$$

The cube can be split into six simplices of equal volumes in different ways. One of them is particularly interesting – we shall call it a *diagonal split*. Select two opposite vertices, say O_1 and O_2. The remaining vertices can be connected by edges of the cube so that they form a closed polygonal line $L=V_0\ldots V_5V_0$. The diagonal split consists of six simplices $O_1O_2V_kV_{k+1}$. Note that O_1V_k and O_2V_{k+1} are of the same length – they are both edges of the cube or diagonals of its faces. The next theorem shows how the diagonal split can be explored.

THEOREM 8.3. *Consider a diagonal split of a cube $\mathscr{C}$. Denote by S the set of six edges adjacent to O_1 and O_2 and by P the set of six diagonals of faces adjacent to O_1 and O_2. If $f\colon\mathscr{C}\to\mathbb{R}$ is convex on each simplex of the split, then*

$$\operatorname{Avg}(f,\mathscr{C}) \leqslant \frac{1}{2}\operatorname{Avg}(f,O_1O_2)+\frac{1}{2}\operatorname{Avg}(f,L), \tag{31}$$
$$\operatorname{Avg}(f,\mathscr{C}) \leqslant \operatorname{Avg}(f,P), \tag{32}$$
$$\operatorname{Avg}(f,\mathscr{C}) \leqslant \operatorname{Avg}(f,S), \tag{33}$$

(see Figure 5).

Proof. To prove (31) use Theorem 2.1 dividing the vertices of $O_1O_2V_kV_{k+1}$ into groups $\{O_1O_2\}$ and $\{V_kV_{k+1}\}$. Two other splits lead to (32) and (33). $\square$

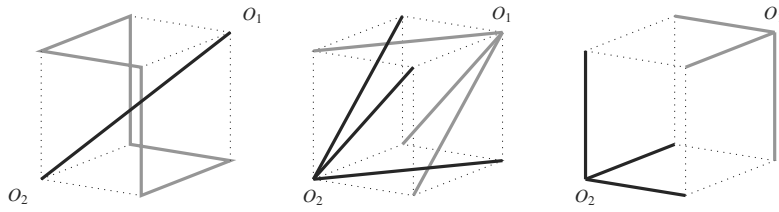

Theorem 8.3 (31) Theorem 8.3 (32) Theorem 8.3 (33)

Figure 5: *Hermite-Hadamard inequalities for cube*

Next theorem presents an interesing asymmetric case:

THEOREM 8.4. *Let A be a vertex of the cube $\mathscr{C}$ and let S be the set consisting of its faces nonadjacent to A. If $f : \mathscr{C} \to \mathbb{R}$ is convex, then*

$$\operatorname{Avg}(f,\mathscr{C}) \leqslant \frac{1}{4}f(A) + \frac{3}{4}\operatorname{Avg}(f,S), \tag{34}$$

$$\operatorname{Avg}(f,h_A^{3/4}(S)) \leqslant \operatorname{Avg}(f,\mathscr{C}), \tag{35}$$

(see Figure 6).

We leave the obvious proof to the reader.

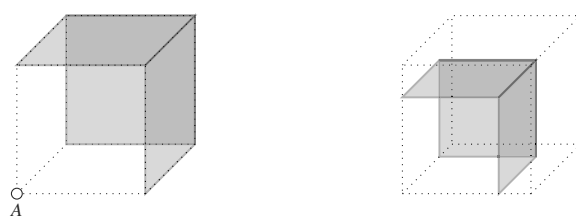

Theorem 8.4 (34) Theorem 8.4 (35)

Figure 6: *Hermite-Hadamard inequalities for cube ctd.*

REFERENCES

[1] M. BESSENYEI, *The Hermite-Hadamard Inequality on Simplices*, Amer. Math. Monthly **115**, 4 (2008), 339–345.

[2] Y. CHEN, *Multi-dimensional Hadamard's inequalities*, Tamkang J. Math. **43**, 1 (2012), 1–10.

[3] S. S. DRAGOMIR AND C. E. M. PEARCE, *Selected topics on Hermite-Hadamard inequalities and applications*, RGMIA Monographs, Victoria University, Melbourne (2000), `http://ajmaa.org/RGMIA/monographs.php`.

[4] J. HADAMARD, *Étude sur les propriétés des fonctions entières et en particulier d'une fonction considérée par Riemann*, J. Math. Pures Appl. **58**, (1893), 171–215.

[5] P. C. HAMMER, *The midpoint method of numerical integration*, Math. Mag. **31**, (1958), 193–195.

[6] E. NEUMAN, *Inequalities involving multivariate convex functions II*, Proc. Amer. Math. Soc. **109**, 4 (1990), 965–974.

[7] M. NOWICKA AND A. WITKOWSKI, *A refinement of the left-hand side of Hermite-Hadamard inequality for simplices*, J. Inequal. Appl. (2015) 2015:373, DOI 10.1186/s13660-015-0904-0

[8] M. NOWICKA AND A. WITKOWSKI, *A refinement of the right-hand side of the Hermite-Hadamard inequality for simplices*, Aequationes Math. (2016) DOI: 10.1007/s00010-016-0433-z

[9] J. PEČARIĆ, F. PROSCHAN AND Y. L. TONG, *Convex Functions, Partial Orderings, and Statistical Applications*, Academic Press, Inc., 1992.

[10] S. WĄSOWICZ AND A. WITKOWSKI, *On some inequality of Hermite-Hadamard type*, Opuscula Math. **32**, 3 (2012), 591–600.

(Received March 22, 2016)

Monika Nowicka
Institute of Mathematics and Physics
UTP University of Science and Technology
al. prof. Kaliskiego 7
85-796 Bydgoszcz, Poland
e-mail: `monika.nowicka@utp.edu.pl`

Alfred Witkowski
Institute of Mathematics and Physics
UTP University of Science and Technology
al. prof. Kaliskiego 7
85-796 Bydgoszcz, Poland
e-mail: `alfred.witkowski@utp.edu.pl`

Mathematical
Inequalities
& Applications
Volume 19, Number 4 (2016), 1335–1348 doi:10.7153/mia-19-98

ON CONVERGENCE PROPERTIES OF GAMMA–STANCU OPERATORS BASED ON q–INTEGERS

ÖZGE DALMANOĞLU AND MEDIHA ÖRKCÜ

(*Communicated by K. Nikodem*)

Abstract. In this paper we introduce Stancu type generalization of Gamma operators based on the concept of q-integers. We first establish local approximation theorems for these operators. Next, we investigate the weighted approximation properties and give an estimate for the rate of convergence using classical modulus of continuity. Lastly, we obtain a Voronovskaya type theorem.

1. Introduction

Let f be a function defined on $[0,\infty)$ and satisfies the growth condition:

$$f(t) \leqslant Me^{\beta t} \qquad (M \geqslant 0;\ \beta \geqslant 0;\ t \to \infty).$$

In 2005, Zeng [20] defined the following Gamma operators

$$G_n(f;x) = \frac{1}{x^n \Gamma(n)} \int_0^\infty f\left(\frac{t}{n}\right) t^{n-1} e^{-\frac{t}{x}} dt, \quad x > 0, \tag{1}$$

for functions satisfying exponential growth condition. He studied the approximation properties of these operators to the locally bounded functions and the absolutely continuous functions. One of the important generalizations of the Gamma operators is due to Mazhar [13], namely

$$F_n(f;x) := \int_0^\infty \int_0^\infty g_n(x,u) g_{n-1}(u,t) f(t) du dt = \frac{(2n)! x^{n+1}}{n!(n-1)!} \int_0^\infty \frac{t^{n-1}}{(x+t)^{2n+1}} f(t) dt,$$

where $g_n(x,u) = \frac{x^{n+1}}{n!} e^{-xu} u^n$, $n > 1$, $x > 0$. In [8] Karslı considered the following Gamma type linear and positive operators

$$L_n(f;x) := \int_0^\infty \int_0^\infty g_{n+2}(x,u) g_n(u,t) f(t) du dt = \frac{(2n+3)! x^{n+3}}{n!(n+2)!} \int_0^\infty \frac{t^n}{(x+t)^{2n+4}} f(t) dt, \tag{2}$$

Mathematics subject classification (2010): 41A25, 41A36.
Keywords and phrases: Gamma operators, q-calculus, rate of convergence, weighted approximation, Voronovskaya type theorem.

Paper MIA-19-98

for $x > 0$, and obtained some approximation results. Karslı, Gupta and İzgi [9] gave an estimate for the rate of convergence of these operators on a Lebesgue point of a function f of bounded variation defined on the interval $(0,\infty)$. In [10], Karslı and Özarslan also gave some local and global approximation results for the same operators.

In the last two decades q-calculus are intensively used in the area of approximation theory. Pioneer work is due to Lupaş [12] and Phillips [14], as they introduce the q-analogue of well-known Bernstein polynomials. After q-Bernstein operators, several operators' q-generalizations are defined and approximation properties are investigated. We now recall some concepts from q-calculus. Details can be found in [7].

For any real number $q > 0$, the q-integer and the q-factorial of a nonnegative integer k are defined as

$$[k]_q := [k] = \begin{cases} \dfrac{1-q^k}{1-q}, & q \neq 1 \\ k, & q = 1. \end{cases}$$

$$[k]_q! := [k]! = \begin{cases} [k]\,[k-1]\ldots[1], & k = 1,2,\ldots \\ 1, & k = 0 \end{cases}$$

respectively. For the integers n and k, the q-binomial coefficients are also defined as

$$\begin{bmatrix} n \\ k \end{bmatrix}_q := \begin{bmatrix} n \\ k \end{bmatrix} = \frac{[n]!}{[k]!\,[n-k]!} \qquad (n \geqslant k \geqslant 0).$$

The q-integral and the q-improper integral are defined as

$$\int_0^a f(x)d_qx = (1-q)\sum_{j=0}^{\infty} aq^j f(aq^j).$$

$$\int_0^{\infty/A} f(x)\,d_qx = (1-q)\sum_{n=-\infty}^{\infty} f\left(\frac{q^n}{A}\right)\frac{q^n}{A}, \quad A > 0, \tag{3}$$

respectively, provided the sums converge absolutely. The classical exponential function e^x has the following two q-analogues:

$$e_q(x) = \sum_{k=0}^{\infty} \frac{x^k}{[k]!} = \frac{1}{(1-(1-q)x)_q^{\infty}}$$

$$E_q(x) = \sum_{k=0}^{\infty} q^{k(k-1)/2}\frac{x^k}{[k]!} = (1+(1-q)x)_q^{\infty}, \tag{4}$$

where $(1+x)_q^{\infty} = \prod_{j=0}^{\infty}(1+q^jx)$. The q-Gamma function was introduced by Thomae [18] and later by Jackson [6] as the infinite product

$$\Gamma_q(t) = (1-q)^{1-t}\prod_{n=0}^{\infty}\frac{1-q^{n+1}}{1-q^{n+t}}.$$

The integral representation of q-Gamma function [15] is given by

$$\Gamma_q(t) = \int_0^{\frac{1}{1-q}} x^{t-1} E_q(-qx) d_q x \tag{5}$$

which satisfies the functional equations

$$\begin{aligned} \Gamma_q(t+1) &= [t]\Gamma_q(t), \quad t>0, \quad \Gamma_q(1)=1, \\ \Gamma_q(t) &= [t-1]!, \quad t>0. \end{aligned} \tag{6}$$

Note that (5) can also be rewritten via an improper integral as

$$\Gamma_q(t) = \int_0^{\infty/1-q} x^{t-1} E_q(-qx) d_q x \tag{7}$$

since $E_q\left(-\frac{q^n}{1-q}\right) = 0$ for $n \leqslant 0$. For more detailed information, see [1] and [16].

As the q-generalizations of linear positive operators have been introduced by several authors, similar studies are also valid for the Gamma type operators. In [4], Cai introduced a q-analogue of the Gamma operators defined by (1) as

$$G_{n,q}(f;x) = \frac{1}{x^n \Gamma_q(n)} \int_0^{\infty/A} f\left(\frac{t}{[n]}\right) t^{n-1} E_q\left(-\frac{qt}{x}\right) d_q t \tag{8}$$

and investigated the approximation properties of these operators. In [3], Cai and Zeng introduced a q-generalization of gamma type operators given by (2) using the concept of q-integral. They estimated the rate of convergence and examined the weighted approximation properties. Later then Zhao et. al. [21] proposed the Stancu type generalization of the same q-Gamma operators and studied similar concepts. Stancu [17] was the first to modify Bernstein operators as

$$P_n^{\alpha,\beta}(f;x) = \sum_{k=0}^{n} \binom{n}{k} x^k (1-x)^{n-k} f\left(\frac{k+\alpha}{n+\beta}\right)$$

for $x \in [0,1]$ and α, β are any numbers satisfying $0 \leqslant \alpha \leqslant \beta$. For more studies on q-Gamma type operators see also [11] and references therein. Another operator that is related to our study is the Post-Widder operators. Ünal et. al. [19] studied the statistical approximation properties of real and complex Post-Widder operators based on the q-integers. Recently Aydın et. al. [2] also introduced a generalization of q-Post-Widder operators and studied approximation properties.

In the present paper, we introduce the Stancu type modification of the q-Gamma operators. We study the approximation theorems for these operators. Local approximation theorems, weighted approximation and rate of convergence results are investigated. Voronovskaya type theorem is also obtained in the last section.

2. Construction of the operators

By $C_B(0,\infty)$, we denote the space of real valued functions defined on $(0,\infty)$ which are bounded and continuous with the norm $\|f\| = \sup_{x>0} |f(x)|$.

We define the Stancu type generalization of the q-Gamma operators for $n \in \mathbb{N}$, $0 < q < 1$ as

$$G_{n,q}^{\alpha,\beta}(f;x) = \frac{1}{x^n \Gamma_q(n)} \int_0^{\infty/\frac{1-q}{x}} f\left(\frac{t+\alpha}{[n]+\beta}\right) t^{n-1} E_q\left(-\frac{qt}{x}\right) d_q t, \qquad x > 0. \tag{9}$$

where α and β are two numbers satisfying $0 \leqslant \alpha \leqslant \beta$. It is easy to check that (9) is linear and positive. By putting $\alpha = \beta = 0$, the operators reduces to the Gamma operators defined by (8) with $A = \frac{1-q}{x}$.

We first give the following Lemma in order to investigate the approximation theorems in the proceeding sections.

REMARK 1. Note that we take $\frac{1-q}{x}$ instead of A in the definition of the improper integral, so that we are able to get the function $\Gamma_q(n)$ after making the change of variable when finding the test functions. We have to be careful when writing the upper limit of the integral after making the change of variable as it differs from the ordinary calculus.

LEMMA 1. *For $q \in (0,1)$, $x \in (0,\infty)$, we have the following test functions for the operator defined in (9).*

$$\begin{aligned}
G_{n,q}^{\alpha,\beta}(1;x) &= 1 \\
G_{n,q}^{\alpha,\beta}(t;x) &= \frac{[n]}{[n]+\beta}x + \frac{\alpha}{[n]+\beta} \\
G_{n,q}^{\alpha,\beta}(t^2;x) &= \frac{[n]^2}{([n]+\beta)^2}\left(1+\frac{q^n}{[n]}\right)x^2 + \frac{2[n]\alpha}{([n]+\beta)^2}x + \frac{\alpha^2}{([n]+\beta)^2} \\
G_{n,q}^{\alpha,\beta}(t^3;x) &= \frac{[n]^3}{([n]+\beta)^3}\left(1+\frac{q^n(2+q)}{[n]}+\frac{[2]q^{2n}}{[n]^2}\right)x^3 \\
&\quad + \frac{3[n]^2\alpha}{([n]+\beta)^3}\left(1+\frac{q^n}{[n]}\right)x^2 + \frac{3[n]\alpha^2}{([n]+\beta)^3}x + \frac{\alpha^3}{([n]+\beta)^3} \\
G_{n,q}^{\alpha,\beta}(t^4;x) &= \frac{[n]^4}{([n]+\beta)^4}\left(1+\frac{(1+[2]+[3])q^n}{[n]}+\frac{([2]+[3]+[2][3])q^{2n}}{[n]^2}+\frac{[2][3]q^{3n}}{[n]^3}\right)x^4 \\
&\quad + \frac{4[n]^3\alpha}{([n]+\beta)^4}\left(1+\frac{q^n(2+q)}{[n]}+\frac{[2]q^{2n}}{[n]^2}\right)x^3 \\
&\quad + \frac{6[n]^2\alpha^2}{([n]+\beta)^4}\left(1+\frac{q^n}{[n]}\right)x^2 + \frac{4[n]\alpha^3}{([n]+\beta)^4}x + \frac{\alpha^4}{([n]+\beta)^4}.
\end{aligned}$$

Proof. We prove the first equality by making the change of variable $t = ux$.

$$\begin{aligned} G_{n,q}^{\alpha,\beta}(1;x) &= \frac{1}{x^n \Gamma_q(n)} \int_0^{\infty/\frac{1-q}{x}} t^{n-1} E_q\left(-\frac{qt}{x}\right) d_q t \\ &= \frac{1}{x^n \Gamma_q(n)} \int_0^{\infty/1-q} u^{n-1} x^{n-1} E_q(-qu)\, x d_q u \\ &= 1. \end{aligned}$$

For $\alpha = 0$, $\beta \neq 0$, and $k = 0,1,2,\ldots$, using the identity (6), we can write

$$\begin{aligned} G_{n,q}^{0,\beta}\left(t^k;x\right) &= \frac{1}{x^n \Gamma_q(n)} \int_0^{\infty/\frac{1-q}{x}} \left(\frac{t}{[n]+\beta}\right)^k t^{n-1} E_q\left(-\frac{qt}{x}\right) d_q t \\ &= \frac{1}{x^n \Gamma_q(n)} \int_0^{\infty/1-q} \frac{u^k x^k}{([n]+\beta)^k} u^{n-1} x^{n-1} E_q(-qu)\, x d_q u \\ &= \frac{x^k \Gamma_q(n+k)}{([n]+\beta)^k \Gamma_q(n)} = \frac{[n+k-1]!}{[n-1]!} \frac{x^k}{([n]+\beta)^k}. \end{aligned}$$

Now in the light of the above equality, we can write $G_{n,q}^{\alpha,\beta}\left(t^k;x\right)$ in terms of $G_{n,q}^{0,\beta}\left(t^k;x\right)$ as,

$$\begin{aligned} G_{n,q}^{\alpha,\beta}\left(t^k;x\right) &= \frac{1}{x^n \Gamma_q(n)} \int_0^{\infty/\frac{1-q}{x}} \left(\frac{t+\alpha}{[n]+\beta}\right)^k t^{n-1} E_q\left(-\frac{qt}{x}\right) d_q t \\ &= \sum_{j=0}^{k} \binom{k}{j} \left(\frac{\alpha}{[n]+\beta}\right)^j \frac{1}{x^n \Gamma_q(n)} \int_0^{\infty/\frac{1-q}{x}} \frac{t^{k-j}}{([n]+\beta)^{k-j}} t^{n-1} E_q\left(\frac{-qt}{x}\right) d_q t \\ &= \sum_{j=0}^{k} \binom{k}{j} \left(\frac{\alpha}{[n]+\beta}\right)^j G_{n,q}^{0,\beta}\left(t^{k-j};x\right). \end{aligned}$$

Using the identity $[n+k] = [n] + q^n [k]$, for $k \geqslant 0$, one can obtain the desired equalities after simple calculations. $\square$

COROLLARY 1. *For every* $q \in (0,1)$, $x \in (0,\infty)$, *we have*

$$G_{n,q}^{\alpha,\beta}(t-x;x) = \left(\frac{[n]}{[n]+\beta} - 1\right) x + \frac{\alpha}{[n]+\beta}$$

$$\begin{aligned} G_{n,q}^{\alpha,\beta}\left((t-x)^2;x\right) = &\left(\frac{[n]^2}{([n]+\beta)^2}\left(1+\frac{q^n}{[n]}\right) - \frac{2[n]}{[n]+\beta} + 1\right) x^2 \\ &+ 2\alpha\left(\frac{[n]}{([n]+\beta)^2} - \frac{1}{[n]+\beta}\right) x + \frac{\alpha^2}{([n]+\beta)^2} \end{aligned} \tag{10}$$

$$
\begin{aligned}
G_{n,q}^{\alpha,\beta}\left((t-x)^4;x\right) = & \left\{\frac{[n]^4}{([n]+\beta)^4}+\frac{[n]^3}{([n]+\beta)^4}(1+[2]+[3])\,q^n\right. \\
& +\frac{[n]^2([2]+[3]+[2][3])\,q^{2n}}{([n]+\beta)^4} \\
& +\frac{[n][2][3]\,q^{3n}}{([n]+\beta)^4}-\frac{4[n]^3}{([n]+\beta)^3}\left(1+\frac{q^n(2+q)}{[n]}+\frac{[2]\,q^{2n}}{[n]^2}\right) \\
& \left.+6\frac{[n]^2}{([n]+\beta)^2}\left(1+\frac{q^n}{[n]}\right)-4\frac{[n]}{[n]+\beta}+1\right\}x^4 \\
& +\left\{\frac{4[n]^3\alpha}{([n]+\beta)^4}\left(1+\frac{q^n(2+q)}{[n]}+\frac{[2]\,q^{2n}}{[n]^2}\right)\right. \\
& \left.-\frac{12[n]^2\alpha}{([n]+\beta)^3}\left(1+\frac{q^n}{[n]}\right)+\frac{12[n]\alpha}{([n]+\beta)^2}-\frac{4\alpha}{[n]+\beta}\right\}x^3 \\
& +\left\{\frac{6[n]^2\alpha^2}{([n]+\beta)^4}\left(1+\frac{q^n}{[n]}\right)-\frac{12[n]\alpha^2}{([n]+\beta)^3}+\frac{6\alpha^2}{([n]+\beta)^2}\right\}x^2 \\
& +\left\{\frac{4[n]\alpha^3}{([n]+\beta)^4}-\frac{4\alpha^3}{([n]+\beta)^3}\right\}x+\frac{\alpha^4}{([n]+\beta)^4}
\end{aligned}
\tag{11}
$$

THEOREM 1. *Let $q=(q_n)$ be a sequence satisfing*

$$
(q_n)\in(0,1),\quad \lim_{n\to\infty}q_n=1 \quad \textit{and} \quad \lim_{n\to\infty}q_n^n=a,\quad a\neq 0. \tag{12}
$$

For each $f\in C_B(0,\infty)$, the sequence $\left(G_{n,q_n}^{\alpha,\beta}(f;.)\right)$ converges uniformly to the function f on every compact subset of $(0,\infty)$.

Proof. Let $\lim_{n\to\infty}q_n=1$. Since $\lim_{n\to\infty}q_n^n=a$, $a\neq 0$, we see that

$$
\begin{aligned}
G_{n,q_n}^{\alpha,\beta}(1;.) &\rightrightarrows 1,\\
G_{n,q_n}^{\alpha,\beta}(t;.) &\rightrightarrows x,\\
G_{n,q_n}^{\alpha,\beta}\left(t^2;.\right) &\rightrightarrows x^2
\end{aligned}
$$

from Lemma 1. Therefore from the well known Korovkin's Theorem we get the desired result. □

3. Local approximation

Recall that the first-order and second-order modulus of continuities of the function $f \in C_B(0,\infty)$ is defined by for $\delta > 0$

$$w(f;\delta) = \sup\{|f(x+h)-f(x)| : x>0,\ 0 \leqslant h \leqslant \delta\},$$
$$w_2(f;\delta) = \sup\{|f(x+2h)-2f(x+h)+f(x)| : x>0,\ 0 \leqslant h \leqslant \delta\}.$$

The Peetre's K-functional of the function $f \in C_B(0,\infty)$ is defined by

$$K_2(f;\delta) = \inf_{g \in C_B^2(0,\infty)} \left\{ \|f-g\| + \delta \left\|g''\right\| \right\}.$$

Here $C_B^2(0,\infty)$ is the space of functions f such that $f,\ f',\ f'' \in C_B(0,\infty)$. The norm on C_B^2 is defined as

$$\|g\|_{C_B^2} = \|g\|_{C_B} + \left\|g'\right\|_{C_B} + \left\|g''\right\|_{C_B}.$$

It is known that there exists a positive constant $C>0$ such that

$$K_2(f;\delta) \leqslant C w_2(f;\sqrt{\delta}). \tag{13}$$

LEMMA 2. *For $f \in C_B(0,\infty)$ one has*

$$\left| G_{n,q}^{\alpha,\beta}(f;x) \right| \leqslant \|f\|.$$

Proof. The proof follows from the linearity of the operator $G_{n,q}^{\alpha,\beta}$ and from the first identity of Lemma 1. □

Here is our direct local approximation theorem for the operators $G_{n,q}^{\alpha,\beta}$.

THEOREM 2. *Let $f \in C_B(0,\infty)$ and $0<q<1$. For each $x \in (0,\infty)$*

$$\left| G_{n,q}^{\alpha,\beta}(f;x) - f(x) \right| \leqslant C w_2(f;\sqrt{\delta_{n,q}(x)}) + w(f;\mu_{n,q}(x))$$

for some positive constant C, where

$$\delta_{n,q}(x) = G_{n,q}^{\alpha,\beta}\left((t-x)^2;x\right) + \left(\frac{[n]}{[n]+\beta}x + \frac{\alpha}{[n]+\beta} - x\right)^2$$

and

$$\mu_{n,q}(x) = \left| \frac{[n]}{[n]+\beta}x + \frac{\alpha}{[n]+\beta} - x \right|$$

Proof. For $x \in (0,\infty)$ consider the following auxiliary operator $\widetilde{G}_{n,q}^{\alpha,\beta}(f;x)$ defined by

$$\widetilde{G}_{n,q}^{\alpha,\beta}(f;x) = G_{n,q}^{\alpha,\beta}(f;x) + f(x) - f\left(\frac{[n]}{[n]+\beta}x + \frac{\alpha}{[n]+\beta}\right). \tag{14}$$

From Corollary 1, $\widetilde{G}_{n,q}^{\alpha,\beta}$ reproduce linear functions, i.e.

$$\widetilde{G}_{n,q}^{\alpha,\beta}(t-x;x)=0.$$

Let $x\in(0,\infty)$ and $g\in C_B^2(0,\infty)$. By Taylor's Theorem we have

$$g(t)=g(x)+g'(x)(t-x)+\int_x^t (t-u)g''(u)du.$$

Applying $\widetilde{G}_{n,q}^{\alpha,\beta}$ to the both side of the above equality, we get

$$\begin{aligned}\widetilde{G}_{n,q}^{\alpha,\beta}(g(t);x)-g(x)&=\widetilde{G}_{n,q}^{\alpha,\beta}\left(\int_x^t (t-u)g''(u)du;x\right)\\&=G_{n,q}^{\alpha,\beta}\left(\int_x^t (t-u)g''(u)du;x\right)\\&\quad-\left(\int_x^{\frac{[n]}{[n]+\beta}x+\frac{\alpha}{[n]+\beta}}\left(\frac{[n]}{[n]+\beta}x+\frac{\alpha}{[n]+\beta}-u\right)g''(u)du\right)\end{aligned}$$

$$\begin{aligned}\left|\widetilde{G}_{n,q}^{\alpha,\beta}(g;x)-g(x)\right|&\leqslant\|g''\|\left\{G_{n,q}^{\alpha,\beta}\left(\int_x^t (t-u)du;x\right)\right.\\&\quad\left.+\left(\int_x^{\frac{[n]}{[n]+\beta}x+\frac{\alpha}{[n]+\beta}}\left|\frac{[n]}{[n]+\beta}x+\frac{\alpha}{[n]+\beta}-u\right|du\right)\right\}\\&\leqslant\|g''\|\left\{G_{n,q}^{\alpha,\beta}\left((t-x)^2;x\right)+\left(\frac{[n]}{[n]+\beta}x+\frac{\alpha}{[n]+\beta}-x\right)^2\right\}\\&=\delta_{n,q}(x)\|g''\|\end{aligned}$$

On the other hand from (14) and Lemma 2, we have

$$\begin{aligned}\left|\widetilde{G}_{n,q}^{\alpha,\beta}(f;x)\right|&\leqslant\left|G_{n,q}^{\alpha,\beta}(f;x)\right|+2\|f\|\\&\leqslant 3\|f\|.\end{aligned}$$

Thus, from (14) we can write

$$\begin{aligned}
\left|G_{n,q}^{\alpha,\beta}(f;x)-f(x)\right| &\leqslant \left|\widetilde{G}_{n,q}^{\alpha,\beta}(f;x)-f(x)\right|+\left|f(x)-f\left(\frac{[n]}{[n]+\beta}x+\frac{\alpha}{[n]+\beta}\right)\right| \\
&\leqslant \left|\widetilde{G}_{n,q}^{\alpha,\beta}(f-g;x)\right|+|(f-g)(x)|+\left|\widetilde{G}_{n,q}^{\alpha,\beta}(g;x)-g(x)\right| \\
&\quad+\left|f\left(\frac{[n]}{[n]+\beta}x+\frac{\alpha}{[n]+\beta}\right)-f(x)\right| \\
&\leqslant 4\|f-g\|+\delta_{n,q}(x)\left\|g''\right\|+\left|f(x)-f\left(\frac{[n]}{[n]+\beta}x+\frac{\alpha}{[n]+\beta}\right)\right|
\end{aligned}$$

Taking infimum on both side of the above inequality over all $g\in C_B^2(0,\infty)$, we get

$$\left|G_{n,q}^{\alpha,\beta}(f;x)-f(x)\right| \leqslant 4K_2(f;\delta_n)+w\left(f;\left|\frac{[n]}{[n]+\beta}x+\frac{\alpha}{[n]+\beta}-x\right|\right)$$

from which we have the desired result by (13). □

Note that if $q=(q_n)$ is a sequence satisfying the conditions given in (12), then we have $\lim_{n\to\infty}\delta_{n,q_n}(x)=0$ and $\lim_{n\to\infty}\mu_{n,q_n}(x)=0$ which gives us the pointwise rate of convergence of the sequence $\left(G_{n,q_n}^{\alpha,\beta}(f;x)\right)$ to $f(x)$ for every $x\in(0,\infty)$ and $f\in C_B(0,\infty)$.

4. Weighted approximation

Let $B_{x^2}(0,\infty)$ be the set of all functions defined on $(0,\infty)$ satisfying $|f(x)|\leqslant M_f(1+x^2)$. Here M_f is a constant depending only on f. We also have the following subspaces of $B_{x^2}(0,\infty)$:

$$\begin{aligned}
C_{x^2}(0,\infty) &= \{f\in B_{x^2}(0,\infty): f \text{ is continuous on } (0,\infty)\} \\
C_{x^2}^*(0,\infty) &= \left\{f\in C_{x^2}(0,\infty): \lim_{x\to\infty}\frac{f(x)}{1+x^2}=K_f<\infty\right\}
\end{aligned}$$

The norm on $C_{x^2}^*(0,\infty)$ is $\|f\|_{x^2}=\sup_{x>0}\frac{|f(x)|}{1+x^2}$.

In this section we give the weighted approximation theorem for functions f in $C_{x^2}^*(0,\infty)$ using the Korovkin type approximation theorems proved by Gadjiev [5].

THEOREM 3. *Let $q=(q_n)$ be a sequence satisfing the conditions given in (12). Then for each $f\in C_{x^2}^*(0,\infty)$, we have*

$$\lim_{n\to\infty}\left\|G_{n,q_n}^{\alpha,\beta}(f;.)-f(.)\right\|_{x^2}=0.$$

Proof. In order to prove the theorem we need to show that

$$\lim_{n\to\infty}\left\|G_{n,q_n}^{\alpha,\beta}\left(t^k;.\right)-f(.)\right\|_{x^2}=0, \quad \text{for} \quad k=0,1,2. \tag{15}$$

Then from the Korovkin's type Theorem the proof is obvious.

Since $G_{n,q_n}^{\alpha,\beta}(1;x)=1$, condition (15) holds for $k=0$.

For $k=1$, we have

$$\begin{aligned}\left\|G_{n,q_n}^{\alpha,\beta}(t;.)-x\right\|_{x^2} &= \left\|\left(\frac{[n]}{[n]+\beta}-1\right)x+\frac{\alpha}{[n]+\beta}\right\|_{x^2}\\ &\leqslant \left|\frac{[n]}{[n]+\beta}-1\right|\sup_{x>0}\frac{x}{1+x^2}+\frac{\alpha}{[n]+\beta}\sup_{x>0}\frac{1}{1+x^2}\\ &\leqslant \left|\frac{[n]}{[n]+\beta}-1\right|+\frac{\alpha}{[n]+\beta}\end{aligned}$$

Thus

$$\lim_{n\to\infty}\left\|G_{n,q_n}^{\alpha,\beta}(t;.)-x\right\|_{x^2}=0.$$

Similarly for $k=2$,

$$\begin{aligned}\left\|G_{n,q_n}^{\alpha,\beta}(t^2;.)-x^2\right\|_{x^2} &= \sup_{x>0}\frac{\left|G_{n,q_n}^{\alpha,\beta}(t^2;x)-x^2\right|}{1+x^2}\\ &\leqslant \left[\frac{[n]^2}{([n]+\beta)^2}\left(1+\frac{q^n}{[n]}\right)-1\right]\sup_{x>0}\frac{x^2}{1+x^2}\\ &\quad+\frac{2[n]\alpha}{([n]+\beta)^2}\sup_{x>0}\frac{x}{1+x^2}+\frac{\alpha^2}{([n]+\beta)^2}\\ &\leqslant \left|\frac{[n][n+1]}{([n]+\beta)^2}-1\right|+\frac{2[n]\alpha}{([n]+\beta)^2}+\frac{\alpha^2}{([n]+\beta)^2}\end{aligned}$$

Since $\lim_{n\to\infty}q_n=1$ we get

$$\lim_{n\to\infty}\left\|G_{n,q_n}^{\alpha,\beta}(t^2;.)-x^2\right\|_{x^2}=0.$$

Hence the proof is completed from the Korovkin's Theorem given by Gadjiev. □

5. Rate of convergence

Let $w_{x_0,c}(f;\delta)$ denote the modulus of continuity of f on the closed interval $[x_0,c]$, $0<x_0<c$ with

$$w_{x_0,c}(f;\delta)=\sup\{|f(t)-f(x)|:x,t\in[x_0,c],0\leqslant|t-x|\leqslant\delta\},\quad \delta>0.$$

THEOREM 4. *Let $n\in\mathbb{N}$, $q\in(0,1)$ and $0<x_0<c$. For every $f\in C_{x^2}(0,\infty)$,*

$$\left\|G_{n,q}^{\alpha,\beta}(f;.)-f\right\|_{[x_0,c]}\leqslant K\gamma_{n,q}+2w_{x_0,c+1}(f;\sqrt{\gamma_{n,q}}),\tag{16}$$

where $\gamma_{n,q}$ is given by (10) and K is a positive constant depending on f and c. $\|.\|_{[x_0,c]}$ denotes the classical sup-norm on the space $C[x_0,c]$.

Proof. For $x \in [x_0, c]$ and $t > c+1$, since $t - x > 1$

$$\begin{aligned}
|f(t) - f(x)| &\leqslant M_f\left(2 + t^2 + x^2\right) \\
&= M_f\left(2 + x^2 + (t - x + x)^2\right) \\
&\leqslant M_f\left(2 + 2x^2 + (t-x)^2 + 2x(t-x)^2\right) \\
&\leqslant M_f\left(\left(2 + 2x^2\right)(t-x)^2 + (2x+1)(t-x)^2\right) \\
&\leqslant M_f\left(3 + 2c + 2c^2\right)(t-x)^2. \qquad (17)
\end{aligned}$$

For $x \in [x_0, c]$, $x_0 \leqslant t \leqslant c+1$, and $\delta > 0$

$$|f(t) - f(x)| \leqslant w_{x_0,c+1}(f; |t-x|) \leqslant \left(1 + \frac{|t-x|}{\delta}\right) w_{x_0,c+1}(f;\delta), \quad \delta > 0. \qquad (18)$$

From (17) and (18), we get for all $x \in [x_0, c]$ and $t \geqslant x_0$

$$|f(t) - f(x)| \leqslant K(t-x)^2 + \left(1 + \frac{|t-x|}{\delta}\right) w_{x_0,c+1}(f;\delta)$$

where $K = M_f\left(3 + 2c + 2c^2\right)$. Thus we have

$$\left|G_{n,q}^{\alpha,\beta}(f;x) - f(x)\right| \leqslant K G_{n,q}^{\alpha,\beta}\left((t-x)^2; x\right) + w_{x_0,c+1}(f;\delta)\left[1 + \frac{1}{\delta}\left(G_{n,q}^{\alpha,\beta}\left((t-x)^2; x\right)\right)^{1/2}\right]$$

Using the identity for the second central moment of the operator $G_{n,q}^{\alpha,\beta}$ in (10) and taking supremum over the interval $x \in [x_0, c]$, the proof is completed. □

COROLLARY 2. *Let $q = (q_n)$ be a sequence satisfing (12) and $0 < x_0 < c$. For every $f \in C_{x^2}(0,\infty)$, we have*

$$\lim_{n\to\infty} \left\| G_{n,q_n}^{\alpha,\beta}(f;.) - f \right\|_{[x_0,c]} = 0.$$

Proof. Now taking a sequence $q = (q_n)$ satisfing (12) instead of a fixed number $q \in (0,1)$ in Theorem 4, we obtain γ_{n,q_n}, given by (10) tends to zero as $n \to \infty$ which gives us $\lim_{n\to\infty} w_{x_0,c+1}(f; \sqrt{\gamma_{n,q_n}}) = 0$ since f is continuous on $[x_0, c+1]$, $x_0 > 0$. Consequently, it follows from Theorem 4 that for every $f \in C_{x^2}(0,\infty)$, we get $\lim_{n\to\infty} \left\| G_{n,q_n}^{\alpha,\beta}(f;.) - f \right\|_{[x_0,c]} = 0$. □

6. A Voronovskaya type theorem

In this section we give a Voronovskaya Type asymptotic formulas for the operators $G_{n,q}^{\alpha,\beta}$ with the help of the second and fourth central moments. Before the main theorem it is meaningful to give the following Lemma.

LEMMA 3. *Let $G_{n,q}^{\alpha,\beta}$ be the operator defined by (9). Let (q_n) be a sequence such that the conditions in (12) are satisfied. For all $x>0$ we have,*

$$\lim_{n\to\infty}[n]\,G_{n,q_n}^{\alpha,\beta}(t-x;x)=\alpha-\beta x \tag{19}$$

$$\lim_{n\to\infty}[n]\,G_{n,q_n}^{\alpha,\beta}\left((t-x)^2;x\right)=ax^2 \tag{20}$$

and

$$\lim_{n\to\infty}[n]^2\,G_{n,q_n}^{\alpha,\beta}\left((t-x)^4;x\right)=3a^2x^4. \tag{21}$$

Proof. The first equality is obvious. For the second one we have,

$$\begin{aligned}\lim_{n\to\infty}[n]\,G_{n,q_n}^{\alpha,\beta}\left((t-x)^2;x\right) &= \lim_{n\to\infty}\left(\frac{q_n^n[n]^2+\beta^2[n]}{([n]+\beta)^2}x^2-\frac{2\alpha\beta[n]}{([n]+\beta)^2}x+\frac{\alpha^2[n]}{([n]+\beta)^2}\right)\\ &= ax^2\end{aligned}$$

For the last one, making some computations, one can easily see that the limit of the coefficients of the terms $x^i,\ i=0,1,2,3$ tends to zero as $n\to\infty$. We have the coefficient of x^4 as

$$q^n(1-q)^2\frac{[n]^5}{([n]+\beta)^4}+\left[(-3[2]+[3]+[2][3])q^{2n}+4\beta q^n(1-q)\right]\frac{[n]^4}{([n]+\beta)^4}. \tag{22}$$

Using the identity $[n]=\frac{1-q^n}{1-q}$, and applying it to the term $[n]^2$, we can rewrite (22) as

$$q^n(1-q^n)^2\frac{[n]^3}{([n]+\beta)^4}+\left[(-3[2]+[3]+[2][3])q^{2n}+4\beta q^n(1-q)\right]\frac{[n]^4}{([n]+\beta)^4},$$

from which, we get the limit $3a^2$ for $n\to\infty$. Consequently we have

$$\lim_{n\to\infty}[n]^2\,G_{n,q_n}^{\alpha,\beta}\left((t-x)^4;x\right)=3a^2x^4$$

as desired. □

Now we present the Voronovskaya type result for the operator (9).

THEOREM 5. *Let $f,f',f''\in C_{x^2}(0,\infty)$ and (q_n) be a sequence such that (12) is satisfied, then we have*

$$\lim_{n\to\infty}[n]\left\{G_{n,q_n}^{\alpha,\beta}(f;x)-f(x)\right\}=(\alpha-\beta x)f'(x)+\frac{ax^2}{2}f''(x),$$

uniformly with respect to $x\in[x_0,c]$, $0<x_0<c$.

Proof. For $f, f', f'' \in C_{x^2}(0,\infty)$ and $x > 0$, we define a function as

$$r(t) = r(t,x) = \begin{cases} \frac{f(t)-f(x)-(t-x)f'(x)-\frac{1}{2}f''(x)(t-x)^2}{(t-x)^2}, & \text{if } t \neq x \\ 0, & \text{if } t = x. \end{cases}$$

From the definition, $r(x,x) = 0$ and the function $r(.,x) \in C_{x^2}(0,\infty)$. So, by the Taylor's formula we write

$$f(t) = f(x) + (t-x)f'(x) + \frac{1}{2}f''(x)(t-x)^2 + r(t,x)(t-x)^2 \tag{23}$$

where $r(t,x)$ is the Peano form of the remainder and $\lim_{t\to x} r(t,x) = 0$. Applying $G_{n,q_n}^{\alpha,\beta}(f;x)$ to the both side of (23), we have

$$\begin{aligned} [n]\left[G_{n,q_n}^{\alpha,\beta}(f;x) - f(x)\right] &= [n]f'(x)G_{n,q_n}^{\alpha,\beta}(t-x;x) \\ &+ \frac{1}{2}[n]f''(x)G_{n,q_n}^{\alpha,\beta}\left((t-x)^2;x\right) + [n]G_{n,q_n}^{\alpha,\beta}\left((t-x)^2 r(t,x);x\right) \end{aligned} \tag{24}$$

If we apply the Cauchy-Schwarz inequality for the last term on the right hand side of the equality (24), we get

$$[n]G_{n,q_n}^{\alpha,\beta}\left((t-x)^2 r(t,x);x\right) \leqslant \sqrt{G_{n,q_n}^{\alpha,\beta}(r^2(t,x);x)}\sqrt{[n]^2 G_{n,q_n}^{\alpha,\beta}((t-x)^4;x)}. \tag{25}$$

Observe that $r^2(.,x) \in C_{x^2}(0,\infty)$ and $r^2(x,x) = 0$. Also, from Corollary 2, we have

$$\lim_{n\to\infty} G_{n,q_n}^{\alpha,\beta}\left(r^2(t,x);x\right) = r^2(x,x) = 0 \tag{26}$$

uniformly with respect to $x \in [x_0, c]$. In the view of (25), (26) and the Lemma 3, we obtain

$$\lim_{n\to\infty}[n]G_{n,q_n}^{\alpha,\beta}\left((t-x)^2 r(t,x);x\right) = 0. \tag{27}$$

Combining (19), (20) and (27) we get the desired result. □

REFERENCES

[1] A. ARAL, V. GUPTA, R. P. AGARWAL, *Applications of q-Calculus in Operator Theory*, Springer, 2013.

[2] D. AYDIN, A. ARAL AND G. BAŞCANBAZ-TUNCA, *A Generalization of Post-Widder Operators Based on q-Integers*, Annals of the Alexandru Ioan Cuza University-Mathematics.

[3] Q. B. CAI AND X. M. ZENG, *On the convergence of a kind of q-gamma operators*, J. Inequal. Appl. 2013.1 (2013), 1–9.

[4] Q. B. CAI, *Properties of Convergence for a Class of Genralized q-Gamma Operators*, J. Math. Study **47**, 4 (2014), 388–395.

[5] A. D. GADJIEV, *A problem on the convergence of a sequence of positive linear operators on unbounded sets and theorems that are analogous to PP Korovkin's theorem*, Dokl. Akad. Nauk SSSR. **218** (1974), 1001–1004.

[6] F. H. JACKSON, *A generalization of the functions* $\Gamma(n)$ *and* x^n, Proc. Roy. Soc. London **74**, (1904), 64–72.
[7] V. G. KAC AND P. CHEUNG, *Quantum Calculus*, Universitext. Springer, New York, 2002.
[8] H. KARSLI, *Rate of convergence of a new gamma type operators for functions with derivatives of bounded variation*, Math. Comput. Model. **45**, 5–6 (2007), 617–624.
[9] H. KARSLI, V. GUPTA AND A. İZGI, *Rate of pointwise convergence of a new kind of gamma operators for functions of bounded variation*, Appl. Math. Letters **22**, 4 (2009), 505–510.
[10] H. KARSLI AND M. A. ÖZARSLAN, *Direct local and global approximation results for operators of gamma type*, Hacet. J. Math. Stat. **39** (2010), 241–253.
[11] H. KARSLI, P. N. AGRAWAL AND M. GOYAL, *General Gamma type operators based on* q*-integers*, Applied Mathematics and Computation **251** (2015), 564–575.
[12] A. LUPAŞ, *A q-analogue of the Bernstein operator*, Seminar on Numerical and Statistical Calculus, University of Cluj-Napoca, **9** (1987), 85–92.
[13] S. M. MAZHAR, *Approximation by positive operators on infinite intervals*, Mathematica Balkanica **5**, 2 (1991), 99–104,
[14] G. M. PHILLIPS, *Bernstein polynomials based on the* q*-integers*, The heritage of P. L. Chebyshev, Ann. Numer. Math. **4** (1997), 511–518.
[15] A. D. SOLE AND V. KAC, *On the integral representation of the* q*-gamma and the* q*-beta functions*, Rendiconti Lincei: Matematica e Applicazioni 9, **16**, 1 (2005), 11–19.
[16] A. D. SOLE AND V. KAC, *On integral representations of* q*-gamma and* q*-beta functions*, arXiv preprint math/0302032 (2003).
[17] D. D. STANCU, *Approximation of functions by a new class of linear polynomial operators*, Rev. Roumaine Math. Pures Appl. **13** (1968), 1173–1194.
[18] J. THOMAE, *Beitrage zur Theorie der durch die Heinesche Reihe*, J. Reine Angew. Math, **70** (1869), 258–281.
[19] Z. ÜNAL, M. A. ÖZARSLAN, O. DUMAN, *Approximation properties of real and complex Post-Widder operators based on* q*-integers*, Miskolc Math. Notes **13** (2012), 581–603.
[20] X. M. ZENG, *Approximation properties of Gamma operators*, J. Math. Anal. Appl., **311** (2005), 389–401.
[21] C. ZHAO, W. T. CHENG, X. M. ZENG, *Some approximation properties of a kind of* q*-Gamma Stancu operators*, J. Inequal. Appl. (94) (2014).

(Received March 29, 2016)

Özge Dalmanoğlu
Baskent University, Faculty of Education
Department of Mathematics Education
Baglica, Ankara, Turkey
e-mail: ozgedalmanoglu@gmail.com

Mediha Örkcü
Gazi University, Faculty of Sciences
Department of Mathematics
Teknikokullar, 06500 Ankara, Turkey
e-mail: medihaakcay@gazi.edu.tr

Mathematical
Inequalities
& Applications
Volume 19, Number 4 (2016), 1349–1362 doi:10.7153/mia-19-99

CAUCHY'S ERROR REPRESENTATION OF HERMITE INTERPOLATING POLYNOMIAL AND RELATED RESULTS

GORANA ARAS-GAZIĆ, JOSIP PEČARIĆ AND ANA VUKELIĆ

(*Communicated by S. Varošanec*)

Abstract. In this paper we consider convex functions of higher order. Using the Cauchy's error representation of Hermite interpolating polynomial the results concerning to the Hermite-Hadamard inequalities are presented. As a special case, generalizations for the zeros of orthogonal polynomials are considered.

1. Introduction

We follow here notations and terminology about *Hermite interpolating polynomial* from [1, p. 62]:

Let $-\infty < a < b < \infty$, and $a \leqslant a_1 < a_2 \ldots < a_r \leqslant b$, $(r \geqslant 2)$ be given. For $f \in C^n[a,b]$ a unique polynomial $P_H(t)$ of degree $(n-1)$, exists, fulfilling one of the following conditions:

Hermite conditions

$$P_H^{(i)}(a_j) = f^{(i)}(a_j); \quad 0 \leqslant i \leqslant k_j, \quad 1 \leqslant j \leqslant r, \quad \sum_{j=1}^{r} k_j + r = n,$$

in particular:

Simple Hermite or Osculatory conditions $(n = 2m,\ r = m,\ k_j = 1$ for all $j)$

$$P_O(a_j) = f(a_j), \quad P_O'(a_j) = f'(a_j), \quad 1 \leqslant j \leqslant m,$$

Lagrange conditions $(r = n,\ k_j = 0$ for all $j)$

$$P_L(a_j) = f(a_j), \quad 1 \leqslant j \leqslant n,$$

Type $(m, n-m)$ *conditions* $(r = 2,\ 1 \leqslant m \leqslant n-1,\ k_1 = m-1,\ k_2 = n-m-1)$

$$P_{mn}^{(i)}(a) = f^{(i)}(a), \quad 0 \leqslant i \leqslant m-1,$$
$$P_{mn}^{(i)}(b) = f^{(i)}(b), \quad 0 \leqslant i \leqslant n-m-1,$$

Two-point Taylor conditions $(n = 2m,\ r = 2,\ k_1 = k_2 = m-1)$

$$P_{2T}^{(i)}(a) = f^{(i)}(a), \quad P_{2T}^{(i)}(b) = f^{(i)}(b), \quad 0 \leqslant i \leqslant m-1.$$

Mathematics subject classification (2010): Primary 26D15; Secondary 26D07, 26A51.
Keywords and phrases: n-convex function, Hermite interpolating polynomial, Hermite-Hadamard inequality, orthogonal polynomials.

Paper MIA-19-99

DEFINITION 1. Let f be a real-valued function defined on the segment $[a,b]$. The *divided difference* of order n of the function f at distinct points $x_0,\dots,x_n \in [a,b]$, is defined recursively (see [7]) by

$$f[x_i] = f(x_i), \quad (i = 0,\dots,n)$$

and

$$f[x_0,\dots,x_n] = \frac{f[x_1,\dots,x_n] - f[x_0,\dots,x_{n-1}]}{x_n - x_0}.$$

The value $f[x_0,\dots,x_n]$ is independent of the order of the points $x_0,\dots,x_n$.

The definition may be extended to include the case that some (or all) of the points coincide. Assuming that $f^{(j-1)}(x)$ exists, we define

$$f[\underbrace{x,\dots,x}_{j-times}] = \frac{f^{(j-1)}(x)}{(j-1)!}.$$

The notion of n-*convexity* goes back to Popoviciu ([8]). We follow the definition given by Karlin ([6]):

DEFINITION 2. A function $f : [a,b] \to \mathbb{R}$ is said to be n-convex on $[a,b]$, $n \geqslant 0$, if for all choices of $(n+1)$ distinct points in $[a,b]$, n-th order divided difference of f satisfies

$$f[x_0,\dots,x_n] \geqslant 0.$$

In fact, Popoviciu proved that each continuous n-convex function on $[0,1]$ is the uniform limit of the sequence of corresponding Bernstein's polynomials (see for example [7, p. 293]). Also, Bernstein's polynomials of continuous n-convex function are also n-convex functions. Therefore, when stating our results for a continuous n-convex function f, without any loss in generality we assume that $f^{(n)}$ exists and is continuous.

In [5] M. Bessenyei and Zs. Páles were investigating the case of higher order convexity. The base points of the Hermite-Hadamard type inequalities turn out to be the zeros of certain orthogonal polynomials. The main tools of the paper are based on some methods of numerical analysis, like Gauss quadrature formula and Hermite interpolation. They considered the following Gauss type quadrature formulae where the coefficients and the base points are to be determined so that be exact when f is a polynomial of degree at most $2n-1$, $2n$, $2n$ and $2n+1$, respectively:

$$\int_a^b \rho(t)f(t)dt = \sum_{k=1}^{n} c_k f(\xi_k), \tag{1}$$

$$\int_a^b \rho(t)f(t)dt = c_0 f(a) + \sum_{k=1}^{n} c_k f(\xi_k), \tag{2}$$

$$\int_a^b \rho(t)f(t)dt = \sum_{k=1}^{n} c_k f(\xi_k) + c_{n+1} f(b), \tag{3}$$

$$\int_a^b \rho(t)f(t)dt = c_0 f(a) + \sum_{k=1}^{n} c_k f(\xi_k) + c_{n+1} f(b). \tag{4}$$

Using this formulae and the remainder term of the Hermite interpolation they proved Hermite-Hadamard type inequalities in cases of odd and even higher order convexity separately in the subsequent theorems:

THEOREM 1. *Let $\rho : [a,b] \to \mathbb{R}$ be a positive integrable function. Denote the zeros of P_m by $\xi_1, \dots, \xi_m$ where P_m is the m-th degree member of the orthogonal polynomial system on $[a,b]$ with respect to the weight function $(x-a)\rho(x)$, furthermore denote the zeros of Q_m by $\eta_1, \dots, \eta_m$ where Q_m is the m-th degree member of the orthogonal polynomial system on $[a,b]$ with respect to the weight function $(b-x)\rho(x)$. Define the coefficients $\alpha_0, \dots, \alpha_m$ and $\beta_1, \dots, \beta_{m+1}$ by the formulae*

$$\alpha_0 := \frac{1}{P_m^2(a)} \int_a^b P_m^2(x)\rho(x)dx, \quad \alpha_k := \frac{1}{\xi_k - a} \int_a^b \frac{(x-a)P_m(x)}{(x-\xi_k)P_m'(\xi_k)}\rho(x)dx$$

and

$$\beta_k := \frac{1}{b-\eta_k} \int_a^b \frac{(b-x)Q_m(x)}{(x-\eta_k)Q_m'(\eta_k)}\rho(x)dx, \quad \beta_{m+1} := \frac{1}{Q_m^2(b)} \int_a^b Q_m^2(x)\rho(x)dx.$$

If a function $f : [a,b] \to \mathbb{R}$ is $(2m+1)$-convex, then it satisfies the following Hermite-Hadamard type inequality

$$\alpha_0 f(a) + \sum_{k=1}^{m} \alpha_k f(\xi_k) \leqslant \int_a^b \rho(x)f(x)dx \leqslant \sum_{k=1}^{m} \beta_k f(\eta_k) + \beta_{m+1} f(b).$$

THEOREM 2. *Let $\rho : [a,b] \to \mathbb{R}$ be a positive integrable function. Denote the zeros of P_m by $\xi_1, \dots, \xi_m$ where P_m is the m-th degree member of the orthogonal polynomial system on $[a,b]$ with respect to the weight function $\rho(x)$, furthermore denote the zeros of Q_{m-1} by $\eta_1, \dots, \eta_{m-1}$ where Q_{m-1} is the $(m-1)$-st degree member of the orthogonal polynomial system on $[a,b]$ with respect to the weight function $(b-x)(x-a)\rho(x)$. Define the coefficients $\alpha_1, \dots, \alpha_m$ and $\beta_0, \dots, \beta_m$ by the formulae*

$$\alpha_k := \int_a^b \frac{P_m(x)}{(x-\xi_k)P_m'(\xi_k)}\rho(x)dx$$

and

$$\beta_0 := \frac{1}{(b-a)Q_{m-1}^2(a)} \int_a^b (b-x)Q_{m-1}^2(x)\rho(x)dx,$$

$$\beta_k := \frac{1}{(b-\eta_k)(\xi_k - a)} \int_a^b \frac{(b-x)(x-a)Q_{m-1}(x)}{(x-\eta_k)Q_{m-1}'(\eta_k)}\rho(x)dx,$$

$$\beta_m := \frac{1}{(b-a)Q_{m-1}^2(b)} \int_a^b (x-a)Q_{m-1}^2(x)\rho(x)dx.$$

If a function $f : [a,b] \to \mathbb{R}$ is $(2m)$-convex, then it satisfies the following Hermite-Hadamard type inequality

$$\sum_{k=1}^{m} \alpha_k f(\xi_k) \leqslant \int_a^b \rho(x)f(x)dx \leqslant \beta_0 f(a) + \sum_{k=1}^{m-1} \beta_k f(\eta_k) + \beta_m f(b).$$

In this paper we obtain generalizations of above inequalities for convex functions of higher order by using the Cauchy's error representation of Hermite interpolating polynomial. As a special case, generalizations of Hermite-Hadamard type inequalities, where the base points turn out to be the zeros of orthogonal polynomials will be considered. Similar results for Lidstone's polynomial can be found in [4]. See also [2] and [3].

2. Cauchy's error representation

In [1, p. 71] the following theorem is proved:

THEOREM 3. *Let $F(t) \in C^{n-1}([a,b])$ and suppose that $F^{(n)}(t)$ exists at each point of (a,b). Then*

$$F(t) - \sum_{j=1}^{r} \sum_{i=0}^{k_j} H_{ij}(t) F^{(i)}(a_j) = \frac{1}{n!} \omega(t) F^{(n)}(\xi), \tag{5}$$

where $\xi \in (a,b)$ and H_{ij} are fundamental polynomials of the Hermite basis defined by

$$H_{ij}(t) = \frac{1}{i!} \frac{\omega(t)}{(t-a_j)^{k_j+1-i}} \sum_{k=0}^{k_j-i} \frac{1}{k_j!} \left[\frac{(t-a_j)^{k_j+1}}{\omega(t)} \right]^{(k)}_{t=a_j} (t-a_j)^k, \tag{6}$$

where

$$\omega(t) = \prod_{j=1}^{r} (t-a_j)^{k_j+1}. \tag{7}$$

Motivated by (5) and formulae (1), (2), (3) and (4) we define functionals $\Phi_1(f)$, $\Phi_2(f)$, $\Phi_3(f)$ and $\Phi_4(f)$ respectively, by

$$\Phi_1(F) = F(t) - \sum_{j=1}^{r} \sum_{i=0}^{k_j} H_{ij}(t) F^{(i)}(a_j), \tag{8}$$

$$\Phi_2(F) = F(t) - \sum_{i=0}^{k_1} H_{i1}(t) F^{(i)}(a) - \sum_{j=2}^{r} \sum_{i=0}^{k_j} H_{ij}(t) F^{(i)}(a_j), \tag{9}$$

$$\Phi_3(F) = F(t) - \sum_{j=1}^{r-1} \sum_{i=0}^{k_j} H_{ij}(t) F^{(i)}(a_j) - \sum_{i=0}^{k_r} H_{ir}(t) F^{(i)}(b), \tag{10}$$

$$\Phi_4(F) = F(t) - \sum_{i=0}^{k_1} H_{i1}(t) F^{(i)}(a) - \sum_{j=2}^{r-1} \sum_{i=0}^{k_j} H_{ij}(t) F^{(i)}(a_j) - \sum_{i=0}^{k_r} H_{ir}(t) F^{(i)}(b). \tag{11}$$

Now, using Theorem 3 we get the following corollaries:

COROLLARY 1. *Let $F:[a,b]\to\mathbb{R}$ is n-convex function, and H_{ij} are defined on $[a,b]$ by (6), such that k_j is odd for all $j=1,\dots,r$. Then we have*

$$\Phi_1(F)\geqslant 0. \tag{12}$$

Proof. Since k_j is odd for all $j=1,\dots,r$, then using (7), we get that $\omega(t)\geqslant 0$. By using (5) for n-convex function F, (12) obviously holds. □

REMARK 1. If we put that $n=2m$, $r=m$ and $k_j=1$ for all j we get Hermite interpolating polynomial with simple Hermite or Osculatory conditions and then

$$F(t)-\sum_{j=1}^{m}H_{0j}(t)F(a_j)-\sum_{j=1}^{m}H_{1j}(t)F'(a_j)\geqslant 0.$$

COROLLARY 2. *Let $F:[a,b]\to\mathbb{R}$ is n-convex function, and H_{ij} are defined on $[a,b]$ by (6), such that $a_1=a$ and k_j is odd for all $j=2,\dots,r$. Then we have*

$$\Phi_2(F)\geqslant 0. \tag{13}$$

Proof. Now $\omega(t)=(t-a)^{k_1+1}\prod_{j=2}^{r}(t-a_j)^{k_j+1}$. Since k_j is odd for all $j=2,\dots,r$, we get that $\omega(t)\geqslant 0$. So, by using (5) for n-convex function F, (13) obviously holds. □

COROLLARY 3. *Let $F:[a,b]\to\mathbb{R}$ is n-convex function and H_{ij} are defined on $[a,b]$ by (6), such that $a_r=b$. Then*

(a) If k_j is odd for all $j=1,\dots,r$, we have

$$\Phi_3(F)\geqslant 0. \tag{14}$$

(b) If k_j is odd for all $j=1,\dots,r-1$ and k_r is even, we have

$$\Phi_3(F)\leqslant 0. \tag{15}$$

Proof. Now $\omega(t)=(t-b)^{k_r+1}\prod_{j=1}^{r-1}(t-a_j)^{k_j+1}$.
(a) Since k_j is odd for all $j=1,\dots,r$, we get that $\omega(t)\geqslant 0$.
(b) Since k_j is odd for all $j=1,\dots,r-1$ and k_r is even, we get that $\omega(t)\leqslant 0$.
So, by using (5) for n-convex function F, (14) and (15) obviously hold. □

COROLLARY 4. *Let $F:[a,b]\to\mathbb{R}$ is n-convex function and H_{ij} are defined on $[a,b]$ by (6), such that $a_1=a$ and $a_r=b$. Then*

(a) If k_j is odd for all $j=2,\dots,r$, we have

$$\Phi_4(F)\geqslant 0. \tag{16}$$

(b) If k_j is odd for all $j=2,\dots,r-1$ and k_r is even, we have

$$\Phi_4(F)\leqslant 0. \tag{17}$$

Proof. Now $\omega(t) = (t-a)^{k_1+1}(t-b)^{k_r+1}\prod_{j=2}^{r-1}(t-a_j)^{k_j+1}$.
(a) Since k_j is odd for all $j = 2,\dots,r$, we get that $\omega(t) \geqslant 0$.
(b) Since k_j is odd for all $j = 2,\dots,r-1$ and k_r is even, we get that $\omega(t) \leqslant 0$.
So, by using (5) for n-convex function F, (16) and (17) obviously hold. □

REMARK 2. If we put $r = 2$, $1 \leqslant m \leqslant n-1$, $k_1 = m-1$, $k_2 = n-m-1$ and k_2 is odd then we get Hermite interpolating polynomial with $(m, n-m)$ type conditions and then

$$F(t) - \sum_{i=0}^{m-1} H_{i1}(t)F^{(i)}(a) - \sum_{i=0}^{n-m-1} H_{i2}(t)F^{(i)}(b) \geqslant 0.$$

For k_2 even, the above inequality is reversed.

If we put $n = 2m$, $r = 2$, $k_1 = k_2 = m-1$ and m is even then we get Hermite interpolating polynomial with two-point Taylor conditions and then

$$F(t) - \sum_{i=0}^{m-1} H_{i1}(t)F^{(i)}(a) - \sum_{i=0}^{m-1} H_{i2}(t)F^{(i)}(b) \geqslant 0.$$

For m odd, the above inequality is reversed.

REMARK 3. Similarly as in [3] we can construct new families of exponentially convex function and Cauchy type means by looking at linear functionals (8), (9), (10) and (11). The monotonicity property of the generalized Cauchy means obtained via these functionals can be prove by using the properties of the linear functionals associated with this error representation, such as n-exponential and logarithmic convexity.

3. Generalization of the Hermite-Hadamard type inequalities

The classical Hermite-Hadamard inequality states that for a convex function $F : [a,b] \to \mathbb{R}$ the following estimation holds:

$$F\left(\frac{a+b}{2}\right) \leqslant \frac{1}{b-a}\int_a^b F(t)dt \leqslant \frac{F(a)+F(b)}{2}. \tag{18}$$

As a consequences of our results given in Section 2, here we give the generalized Hermite-Hadamard type inequalities.

THEOREM 4. *Let $F : [a,b] \to \mathbb{R}$ is n-convex function, $\rho : [a,b] \to \mathbb{R}$ is a positive integrable function and H_{ij} and $\bar{H}_{ij}$ are defined on $[a,b]$ by*

$$H_{ij}(t) = \frac{1}{i!}\frac{\omega(t)}{(t-a_j)^{k_j+1-i}}\sum_{k=0}^{k_j-i}\frac{1}{k_j!}\left[\frac{(t-a_j)^{k_j+1}}{\omega(t)}\right]_{t=a_j}^{(k)}(t-a_j)^k, \tag{19}$$

and

$$\bar{H}_{ij}(t) = \frac{1}{i!}\frac{\bar{\omega}(t)}{(t-b_j)^{l_j+1-i}}\sum_{k=0}^{l_j-i}\frac{1}{l_j!}\left[\frac{(t-b_j)^{l_j+1}}{\bar{\omega}(t)}\right]_{t=b_j}^{(k)}(t-b_j)^k, \tag{20}$$

where

$$\omega(t)=\prod_{j=1}^{r}(t-a_j)^{k_j+1},\quad \bar{\omega}(t)=\prod_{j=1}^{\bar{r}}(t-b_j)^{l_j+1}$$

for $a\leqslant a_1<a_2\ldots<a_r\leqslant b,\ a\leqslant b_1<b_2\ldots<b_{\bar{r}}\leqslant b,(r,\bar{r}\geqslant 2)$ *and* $\sum_{j=1}^{r}k_j+r=\sum_{j=1}^{\bar{r}}l_j+\bar{r}=n$.

Then, if $a_1=a,\ b_{\bar{r}}=b,\ k_j$ *odd for all* $j=2,\ldots,r,\ l_j$ *odd for all* $j=1,\ldots,\bar{r}-1$ *and* $l_{\bar{r}}$ *even, we have*

$$\begin{aligned}&\sum_{i=0}^{k_1}F^{(i)}(a)\int_a^b\rho(t)H_{i1}(t)dt+\sum_{j=2}^{r}\sum_{i=0}^{k_j}F^{(i)}(a_j)\int_a^b\rho(t)H_{ij}(t)dt\\ \leqslant&\int_a^b\rho(t)F(t)dt\\ \leqslant&\sum_{j=1}^{\bar{r}-1}\sum_{i=0}^{l_j}F^{(i)}(b_j)\int_a^b\rho(t)\bar{H}_{ij}(t)dt+\sum_{i=0}^{l_{\bar{r}}}F^{(i)}(b)\int_a^b\rho(t)\bar{H}_{i\bar{r}}(t)dt.\end{aligned}$$

If F *is* n*-concave, the inequalities are reversed.*

Proof. We use Corollary 2 and Corollary 3(b). □

COROLLARY 5. *Let* $F:[a,b]\to\mathbb{R}$ *is* $(2r-1)$*-convex function and* $\rho:[a,b]\to\mathbb{R}$ *is a positive integrable function. Then, we have*

$$\begin{aligned}&F(a)\int_a^b\rho(t)H_{01}(t)dt+\sum_{j=2}^{r}F(a_j)\int_a^b\rho(t)H_{0j}(t)dt+\sum_{j=2}^{r}F'(a_j)\int_a^b\rho(t)H_{1j}(t)dt\\ \leqslant&\int_a^b\rho(t)F(t)dt\\ \leqslant&\sum_{j=1}^{r-1}F(b_j)\int_a^b\rho(t)\bar{H}_{0j}(t)dt+\sum_{j=1}^{r-1}F'(b_j)\int_a^b\rho(t)\bar{H}_{1j}(t)dt+F(b)\int_a^b\rho(t)\bar{H}_{0r}(t)dt,\end{aligned}\tag{21}$$

where

$$H_{01}(t)=\frac{P_{r-1}^2(t)}{P_{r-1}^2(a)},$$

$$H_{0j}(t)=\frac{(t-a)P_{r-1}^2(t)}{(t-a_j)^2\left[P_{r-1}'(a_j)\right]^2(a_j-a)}\left(1-\frac{P_{r-1}'(a_j)+(a_j-a)P_{r-1}''(a_j)}{(a_j-a)P_{r-1}'(a_j)}(t-a_j)\right),$$

$$H_{1j}(t)=\frac{(t-a)P_{r-1}^2(t)}{(t-a_j)(a_j-a)\left[P_{r-1}'(a_j)\right]^2},$$

$$\bar{H}_{0j}(t)=\frac{(b-t)\bar{P}_{r-1}^2(t)}{(t-b_j)^2\left[\bar{P}_{r-1}'(b_j)\right]^2(b-b_j)}\left(1+\frac{\bar{P}_{r-1}'(b_j)-(b-b_j)\bar{P}_{r-1}''(b_j)}{(b-b_j)\bar{P}_{r-1}'(b_j)}(t-b_j)\right),$$

$$\bar{H}_{1j}(t) = \frac{(b-t)\bar{P}_{r-1}^2(t)}{(t-b_j)(b-b_j)\left[\bar{P}'_{r-1}(b_j)\right]^2}, \quad \bar{H}_{0r}(t) = \frac{\bar{P}_{r-1}^2(t)}{\bar{P}_{r-1}^2(b)},$$

and

$$P_{r-1}(t) = \prod_{j=2}^{r}(t-a_j), \quad \bar{P}_{r-1}(t) = \prod_{j=1}^{r-1}(t-b_j)$$

for $a < a_2 \ldots < a_r \leqslant b$, $a \leqslant b_1 < b_2 \ldots < b_{r-1} < b, (r \geqslant 2)$.

If F *is* $(2r-1)$*-concave, the inequalities are reversed.*

Proof. We put $k_1 = 0$, $k_j = 1$ for $j = 2, \ldots, r$ and $l_j = 1$ for $j = 1, \ldots, r-1$, $l_r = 0$ in Theorem 4 and then calculate

$$H_{01}(t) = \frac{(t-a)P_{r-1}^2(t)}{(t-a)} \cdot \left[\frac{(t-a)}{(t-a)P_{r-1}^2(t)}\right]_{t=a} = \frac{P_{r-1}^2(t)}{P_{r-1}^2(a)},$$

$$\begin{aligned} H_{0j}(t) &= \frac{(t-a)P_{r-1}^2(t)}{(t-a_j)^2}\left\{\left[\frac{(t-a_j)^2}{(t-a)P_{r-1}^2(t)}\right]_{t=a_j} + \left[\frac{(t-a_j)^2}{(t-a)P_{r-1}^2(t)}\right]'_{t=a_j}(t-a_j)\right\} \\ &= \frac{(t-a)P_{r-1}^2(t)}{(t-a_j)^2\left[P'_{r-1}(a_j)\right]^2(a_j-a)}\left(1 - \frac{P'_{r-1}(a_j) + (a_j-a)P''_{r-1}(a_j)}{(a_j-a)P'_{r-1}(a_j)}(t-a_j)\right) \end{aligned}$$

and

$$H_{1j}(t) = \frac{(t-a)P_{r-1}^2(t)}{(t-a_j)}\left[\frac{(t-a_j)^2}{(t-a)P_{r-1}^2(t)}\right]_{t=a_j} = \frac{(t-a)P_{r-1}^2(t)}{(t-a_j)(a_j-a)\left[P'_{r-1}(a_j)\right]^2}.$$

Coefficients $\bar{H}_{0j}$, $\bar{H}_{1j}$ and $\bar{H}_{0r}$ we get similarly. □

REMARK 4. If we choose P_{r-1} and $\bar{P}_{r-1}$ such that they are orthogonal with weight $(t-a)\rho(t)$ and $(b-t)\rho(t)$ respectively, to all polynomials of lower degree, i.e.

$$\int_a^b (t-a)\rho(t)P_{r-1}(t)t^k dt = 0, \quad k = 0, 1, \ldots, r-2 \tag{22}$$

and

$$\int_a^b (b-t)\rho(t)\bar{P}_{r-1}(t)t^l dt = 0, \quad l = 0, 1, \ldots, r-2,$$

we get that

$$\int_a^b \rho(t)H_{1j}(t)dt = 0 \text{ and } \int_a^b \rho(t)\bar{H}_{1j}(t)dt = 0.$$

Now, using the relation for coefficient $H_{1j}(t)$, we get

$$\int_a^b \rho(t)H_{0j}(t)dt$$
$$= \int_a^b \frac{\rho(t)(t-a)P_{r-1}^2(t)}{(a_j-a)(t-a_j)^2\left[P'_{r-1}(a_j)\right]^2}dt - \frac{P'_{r-1}(a_j)+(a_j-a)P''_{r-1}(a_j)}{(a_j-a)P'_{r-1}(a_j)}\int_a^b \rho(t)H_{1j}(t)dt.$$

Now, using (22), we have

$$\int_a^b \frac{\rho(t)(t-a)P_{r-1}(t)}{(t-a_j)P'_{r-1}(a_j)}\left(\frac{P_{r-1}(t)}{(t-a_j)P'_{r-1}(a_j)}-1\right)dt = 0$$

because

$$\frac{P_{r-1}(t)}{(t-a_j)P'_{r-1}(a_j)} - 1 = (t-a_j)Q(t),$$

where $Q(t)$ is polynomial of degree $r-3$. So,

$$\int_a^b \frac{\rho(t)(t-a)P_{r-1}^2(t)}{(t-a_j)^2\left[P'_{r-1}(a_j)\right]^2}dt = \int_a^b \frac{\rho(t)(t-a)P_{r-1}(t)}{(t-a_j)P'_{r-1}(a_j)}dt.$$

Similarly, we calculate $\int_a^b \rho(t)\bar{H}_{0j}(t)dt$ and get the following relations for coefficients in (21):

$$\int_a^b \rho(t)H_{01}(t)dt = \frac{1}{P_{r-1}^2(a)}\int_a^b \rho(t)P_{r-1}^2(t)dt,$$

$$\int_a^b \rho(t)H_{0j}(t)dt = \frac{1}{(a_j-a)P'_{r-1}(a_j)}\int_a^b \frac{\rho(t)(t-a)P_{r-1}(t)}{(t-a_j)}dt,$$

$$\int_a^b \rho(t)H_{1j}(t)dt = 0,$$

$$\int_a^b \rho(t)\bar{H}_{0j}(t)dt = \frac{1}{(b-b_j)\bar{P}'_{r-1}(b_j)}\int_a^b \frac{\rho(t)(b-t)\bar{P}_{r-1}(t)}{(t-b_j)}dt,$$

$$\int_a^b \rho(t)\bar{H}_{1j}(t)dt = 0,$$

$$\int_a^b \rho(t)\bar{H}_{0r}(t)dt = \frac{1}{\bar{P}_{r-1}^2(b)}\int_a^b \rho(t)\bar{P}_{r-1}^2(t)dt,$$

which is result proved by M. Bessenyei and Zs. Páles in [5] (see Theorem 1).

THEOREM 5. *Let $F:[a,b]\to\mathbb{R}$ is n-convex function, $\rho:[a,b]\to\mathbb{R}$ is a positive integrable function and H_{ij} and $\bar{H}_{ij}$ are defined on $[a,b]$ by (19) and (20) respectively.*

Then, if $b_1 = a$, $b_{\bar{r}} = b$, k_j *odd for all* $j = 1,\dots,r$, l_j *odd for all* $j = 2,\dots,\bar{r}-1$ *and* $l_{\bar{r}}$ *even, we have*

$$\begin{aligned}
&\sum_{j=1}^{r}\sum_{i=0}^{k_j} F^{(i)}(a_j)\int_a^b \rho(t)H_{ij}(t)dt \\
&\leqslant \int_a^b \rho(t)F(t)dt \\
&\leqslant \sum_{i=0}^{l_1} F^{(i)}(a)\int_a^b \rho(t)\bar{H}_{i1}(t)dt + \sum_{j=2}^{\bar{r}-1}\sum_{i=0}^{l_j} F^{(i)}(b_j)\int_a^b \rho(t)\bar{H}_{ij}(t)dt \\
&\quad + \sum_{i=0}^{l_{\bar{r}}} F^{(i)}(b)\int_a^b \rho(t)\bar{H}_{i\bar{r}}(t)dt.
\end{aligned}$$

If F *is* n*-concave, the inequalities are reversed.*

Proof. We use Corollary 1 and Corollary 4(b). □

COROLLARY 6. *Let* $F : [a,b] \to \mathbb{R}$ *is* $(2r)$*-convex function and* $\rho : [a,b] \to \mathbb{R}$ *is a positive integrable function. Then, we have*

$$\begin{aligned}
&\sum_{j=1}^{r} F(a_j)\int_a^b \rho(t)H_{0j}(t)dt + \sum_{j=1}^{r} F'(a_j)\int_a^b \rho(t)H_{1j}(t)dt \\
&\leqslant \int_a^b \rho(t)F(t)dt \\
&\leqslant F(a)\int_a^b \rho(t)\bar{H}_{01}(t)dt + \sum_{j=2}^{r} F(b_j)\int_a^b \rho(t)\bar{H}_{0j}(t)dt \\
&\quad + \sum_{j=2}^{r} F'(b_j)\int_a^b \rho(t)\bar{H}_{1j}(t)dt + F(b)\int_a^b \rho(t)\bar{H}_{0(r+1)}(t)dt,
\end{aligned} \tag{23}$$

where

$$H_{0j}(t) = \frac{P_r^2(t)}{(t-a_j)^2\,[P_r'(a_j)]^2}\left(1 - \frac{P_r''(a_j)}{P_r'(a_j)}(t-a_j)\right),$$

$$H_{1j}(t) = \frac{P_r^2(t)}{(t-a_j)\,[P_r'(a_j)]^2}, \quad \bar{H}_{01}(t) = \frac{(b-t)\bar{P}_{r-1}^2(t)}{(b-a)\bar{P}_{r-1}^2(a)},$$

$$\begin{aligned}
\bar{H}_{0j}(t) = &\frac{(t-a)(b-t)\bar{P}_{r-1}^2(t)}{(b_j-a)(b-b_j)(t-b_j)^2\left[\bar{P}_{r-1}'(b_j)\right]^2} \\
&\times\left(1 + \frac{(2b_j-a-b)\bar{P}_{r-1}'(b_j) - (b-b_j)(b_j-a)\bar{P}_{r-1}''(b_j)}{(b-b_j)(b_j-a)\bar{P}_{r-1}'(b_j)}(t-b_j)\right),
\end{aligned}$$

$$\bar{H}_{1j}(t)=\frac{(t-a)(b-t)\bar{P}_{r-1}^2(t)}{(t-b_j)(b_j-a)(b-b_j)\left[\bar{P}'_{r-1}(b_j)\right]^2},\quad \bar{H}_{0(r+1)}(t)=\frac{(t-a)\bar{P}_{r-1}^2(t)}{(b-a)\bar{P}_{r-1}^2(b)}$$

and

$$P_r(t)=\prod_{j=1}^{r}(t-a_j),\quad \bar{P}_{r-1}(t)=\prod_{j=2}^{r}(t-b_j)$$

for $a\leqslant a_1<a_2\ldots<a_r\leqslant b,\ a<b_2\ldots<b_r<b,(r\geqslant 2)$. *If* F *is* $(2r)$*-concave, the inequalities are reversed.*

Proof. We put $k_j=1$ for $j=1,\ldots,r$ and $l_j=1$ for $j=2,\ldots,r$, $l_1=l_{r+1}=0$ in Theorem 5 and then calculate

$$\begin{aligned}H_{0j}&=\frac{P_r^2(t)}{(t-a_j)^2}\left\{\left[\frac{(t-a_j)^2}{P_r^2(t)}\right]_{t=a_j}+\left[\frac{(t-a_j)^2}{P_r^2(t)}\right]'_{t=a_j}(t-a_j)\right\}\\&=\frac{P_r^2(t)}{(t-a_j)^2\left[P'_r(a_j)\right]^2}\left(1-\frac{P''_r(a_j)}{P'_r(a_j)}(t-a_j)\right),\end{aligned}$$

$$H_{1j}(t)=\frac{P_r^2(t)}{t-a_j}\left[\frac{(t-a_j)^2}{P_r^2(t)}\right]_{t=a_j}=\frac{P_r^2(t)}{(t-a_j)\left[P'_r(a_j)\right]^2},$$

$$\bar{H}_{01}(t)=\frac{(t-a)(t-b)\bar{P}_{r-1}^2(t)}{t-a}\left[\frac{t-a}{(t-a)(t-b)\bar{P}_{r-1}^2(t)}\right]_{t=a}=\frac{(b-t)\bar{P}_{r-1}^2(t)}{(b-a)\bar{P}_{r-1}^2(a)},$$

$$\begin{aligned}\bar{H}_{0j}(t)&=\frac{(t-a)(t-b)\bar{P}_{r-1}^2(t)}{(t-b_j)^2}\\&\quad\times\left\{\left[\frac{(t-b_j)^2}{(t-a)(t-b)\bar{P}_{r-1}^2(t)}\right]_{t=b_j}+\left[\frac{(t-b_j)^2}{(t-a)(t-b)\bar{P}_{r-1}^2(t)}\right]'_{t=b_j}(t-b_j)\right\}\\&=\frac{(t-a)(b-t)\bar{P}_{r-1}^2(t)}{(b_j-a)(b-b_j)(t-b_j)^2\left[\bar{P}'_{r-1}(b_j)\right]^2}\\&\quad\times\left(1+\frac{(2b_j-a-b)\bar{P}'_{r-1}(b_j)-(b-b_j)(b_j-a)\bar{P}''_{r-1}(b_j)}{(b-b_j)(b_j-a)\bar{P}'_{r-1}(b_j)}(t-b_j)\right),\end{aligned}$$

$$\begin{aligned}\bar{H}_{1j}(t)&=\frac{(t-a)(t-b)\bar{P}_{r-1}^2(t)}{(t-b_j)}\left[\frac{(t-b_j)^2}{(t-a)(t-b)\bar{P}_{r-1}^2(t)}\right]_{t=b_j}\\&=\frac{(t-a)(b-t)\bar{P}_{r-1}^2(t)}{(t-b_j)(b_j-a)(b-b_j)\left[\bar{P}'_{r-1}(b_j)\right]^2}.\end{aligned}$$

Coefficient $\bar{H}_{0(r+1)}$ we get similarly as coefficient $\bar{H}_{01}(t)$. $\square$

REMARK 5. If we choose P_r such that it is orthogonal with weight $\rho(t)$ to all polynomials of lower degree, i.e.

$$\int_a^b \rho(t)P_r(t)t^k dt = 0, \quad k = 0,1,\dots,r-1$$

we get that

$$\int_a^b \rho(t)H_{1j}(t)dt = 0.$$

Now, similar as in Remark 4 we get

$$\int_a^b \rho(t)H_{0j}(t)dt = \frac{1}{P_r'(a_j)}\int_a^b \frac{\rho(t)P_r(t)}{(t-a_j)}dt.$$

Also, if we choose $\bar{P}_{r-1}$ such that it is orthogonal with weight $(t-a)(b-t)\rho(t)$, to all polynomials of lower degree, i.e.

$$\int_a^b \rho(t)(t-a)(b-t)\bar{P}_{r-1}(t)t^l dt = 0, \quad l = 0,1,\dots,r-2,$$

we get that

$$\int_a^b \rho(t)\bar{H}_{1j}(t)dt = 0$$

and then

$$\int_a^b \rho(t)\bar{H}_{0j}(t)dt = \frac{1}{(b_j-a)(b-b_j)\bar{P}_{r-1}'(b_j)}\int_a^b \frac{\rho(t)(t-a)(b-t)\bar{P}_{r-1}(t)}{(t-b_j)}dt,$$

which is result proved by M. Bessenyei and Zs. Páles in [5] (see Theorem 2).

REMARK 6. If we put $r = 1$ and $\rho(t) = 1$ in Corollary 6, we get $n = 2$ and for $a_1 = \frac{a+b}{2}$ calculate

$$H_{01}(t) = 1 \Rightarrow \int_a^b H_{01}(t)dt = b-a,$$

$$H_{11}(t) = t - \frac{a+b}{2} \Rightarrow \int_a^b H_{11}(t)dt = 0,$$

$$\bar{H}_{01}(t) = \frac{b-t}{b-a} \Rightarrow \int_a^b \bar{H}_{01}(t)dt = \frac{b-a}{2},$$

$$\bar{H}_{02}(t) = \frac{t-a}{b-a} \Rightarrow \int_a^b \bar{H}_{02}(t)dt = \frac{b-a}{2}.$$

So, using (23) for $n = 2$ we get classical Hermite-Hadamard inequality (18).

COROLLARY 7. *Let $F:[a,b]\to\mathbb{R}$ is $(2m)$-convex function and $\rho:[a,b]\to\mathbb{R}$ is a positive integrable function. Then, if m is odd, we have*

$$\begin{aligned}
&\sum_{j=1}^{m} F(a_j)\int_a^b \rho(t)H_{0j}(t)dt+\sum_{j=1}^{m} F'(a_j)\int_a^b \rho(t)H_{1j}(t)dt\\
&\leqslant \int_a^b \rho(t)F(t)dt\\
&\leqslant \sum_{i=0}^{m-1} F^{(i)}(a)\int_a^b \rho(t)\bar{H}_{i1}(t)dt+\sum_{i=0}^{m-1} F^{(i)}(b)\int_a^b \rho(t)\bar{H}_{i2}(t)dt,
\end{aligned}$$

where H_{0j} and H_{1j} as in Corollary 6 with $r=m$,

$$\bar{H}_{i1}(t)=\frac{(t-a)^i(t-b)^m}{i!}\sum_{k=0}^{m-1-i}\frac{(-1)^k(m+k-1)!}{[(m-1)!]^2(a-b)^{m+k}}(t-a)^k, \text{ and}$$

$$\bar{H}_{i2}(t)=\frac{(t-a)^m(t-b)^i}{i!}\sum_{k=0}^{m-1-i}\frac{(-1)^k(m+k-1)!}{[(m-1)!]^2(b-a)^{m+k}}(t-b)^k.$$

If F is $(2m)$-concave, the inequalities are reversed.

Proof. We use Remark 1 and 2 and then calculate

$$\begin{aligned}
\bar{H}_{i1}(t) &= \frac{1}{i!}\frac{(t-a)^m(t-b)^m}{(t-a)^{m-i}}\sum_{k=0}^{m-1-i}\frac{1}{(m-1)!}\left[\frac{(t-a)^m}{(t-a)^m(t-b)^m}\right]_{t=a}^{(k)}(t-a)^k\\
&= \frac{(t-a)^i(t-b)^m}{i!}\sum_{k=0}^{m-1-i}\frac{(-1)^k(m+k-1)!}{[(m-1)!]^2(a-b)^{m+k}}(t-a)^k.
\end{aligned}$$

Coefficient $\bar{H}_{i2}(t)$ we get similarly. □

Acknowledgements. The research of the authors has been fully supported by Croatian Science Foundation under the project 5435.

REFERENCES

[1] R. P. AGARWAL AND P. J. Y. WONG, *Error Inequalities in Polynomial Interpolation and Their Applications*, Kluwer Academic Publishers, Dordrecht/Boston/London, 1993.

[2] G. ARAS-GAZIĆ, V. ČULJAK, J. PEČARIĆ AND A. VUKELIĆ, *Generalization of Jensen's inequality by Lidstone's polynomial and related results*, Math. Ineq. Appl. **16** (4) (2013), 1243–1267.

[3] G. ARAS-GAZIĆ, V. ČULJAK, J. PEČARIĆ AND A. VUKELIĆ, *Generalization of Jensen's inequality by Hermite polynomials and related results*, Math. Rep. **17** (67) (2) (2015), Article 4.

[4] G. ARAS-GAZIĆ, V. ČULJAK, J. PEČARIĆ AND A. VUKELIĆ, *Cauchy's error representation of Lidstone interpolating polynomial and related results*, J. Math. Inequal. **9** (4) (2015), 1207–1225.

[5] M. BESSENYEI AND ZS. PÁLES, *Higher-order generalizations of Hadamard's inequality*, Publ. Math. Debrecen **61** (3–4) (2002), 623–643.

[6] S. KARLIN, *Total Positivity*, Stanford Univ. Press, Stanford, 1968.
[7] J. E. PEČARIĆ, F. PROSCHAN AND Y. L. TONG, *Convex functions, partial orderings, and statistical applications*, Mathematics in science and engineering **187**, Academic Press, 1992.
[8] T. POPOVICIU, *Sur l'approximation des fonctions convexes d'ordre superieur*, Mathematica **10**, (1934), 49–54.

(Received March 30, 2016)

Gorana Aras-Gazić
Faculty of Architecture, University of Zagreb
Fra Andrije Kacica Miosica 26, 10000 Zagreb, Croatia
e-mail: garas@arhitekt.hr

Josip Pečarić
Faculty of Textile Technology, University of Zagreb
Prilaz baruna Filipovica 28a, 10000 Zagreb, Croatia
e-mail: pecaric@element.hr

Ana Vukelić
Faculty of Food Technology and Biotechnology
University of Zagreb
Pierottijeva 6, 10000 Zagreb, Croatia
e-mail: avukelic@pbf.hr

Mathematical
Inequalities
& Applications
Volume 19, Number 4 (2016), 1363–1374 doi:10.7153/mia-19-100

BOAS–TYPE INEQUALITY FOR 3–CONVEX FUNCTIONS AT A POINT

JOSIP PEČARIĆ, DORA POKAZ AND MARJAN PRALJAK

(*Communicated by C. P. Niculescu*)

Abstract. Starting from a very general form of Boas-type inequality from [5] we get Boas-type inequality for 3-convex functions at a point. For special λ-balanced sets, weight functions and measures we derive various examples.

1. Introduction

In [2], R. P. Boas proved that the inequality

$$\int_0^\infty \Phi\left(\frac{1}{M}\int_0^\infty f(tx)\,dm(t)\right)\frac{dx}{x} \leqslant \int_0^\infty \Phi(f(x))\,\frac{dx}{x} \tag{1}$$

holds for all continuous convex functions $\Phi\colon [0,\infty)\to\mathbb{R}$, measurable non–negative functions $f\colon \mathbb{R}_+\to\mathbb{R}$, and non–decreasing bounded functions $m\colon [0,\infty)\to\mathbb{R}$, where $M=m(\infty)-m(0)>0$ and the inner integral on the left-hand side of (1) is the Lebesgue–Stieltjes integral with respect to m. This inequality represent one direction of generalization of the famous Hardy inequality. After its author, relation (1) was named the Boas inequality. In the case of a concave function Φ, (1) holds with the sign of inequality reversed.

S. Kaijser et al. [6] (see also the paper [7] of N. Levinson) established the so-called general Hardy-Knopp-type inequality

$$\int_0^\infty \Phi\left(\frac{1}{x}\int_0^x f(t)\,dt\right)\frac{dx}{x} \leqslant \int_0^\infty \Phi(f(x))\,\frac{dx}{x}, \tag{2}$$

for positive measurable functions $f\colon \mathbb{R}_+\to\mathbb{R}$, and a real convex function Φ on $\mathbb{R}_+$. Later on, A. Čižmešija et al. [4] generalized relation (2) to the so-called strengthened Hardy-Knopp-type inequality by inserting a weight function and integrating over intervals of non-negative real numbers. Further, in [3] A. Čižmešija et al. considered a general Borel measure λ on $\mathbb{R}_+$, such that $L=\lambda(\mathbb{R}_+)=\int_0^\infty d\lambda(t)<\infty$, and proved

Mathematics subject classification (2010): Primary 26D10; Secondary 26D15.
Keywords and phrases: Boas inequality, 3-convex function at a point.
This work has been fully supported by Croatian Science Foundation under the project 5435.

Paper MIA-19-100

that for a convex function Φ on an interval $I \subseteq \mathbb{R}$ and a weight function u on $\mathbb{R}_+$ the inequality

$$\int_0^\infty u(x)\Phi(Af(x))\,\frac{dx}{x} \leqslant \frac{1}{L}\int_0^\infty w(x)\Phi(f(x))\,\frac{dx}{x}$$

holds for all measurable functions $f\colon \mathbb{R}_+ \to \mathbb{R}$ such that $f(x) \in I$ for all $x \in \mathbb{R}_+$, where $Af(x) = \frac{1}{L}\int_0^\infty f(tx)\,d\lambda(t)$ and $w(x) = \int_0^\infty u\left(\frac{x}{t}\right)d\lambda(t) < \infty$, $x \in \mathbb{R}_+$.

Observe that a non-decreasing and bounded function $m\colon [0,\infty) \to \mathbb{R}$ such that $M = m(\infty) - m(0) > 0$ induces a finite Borel measure λ on $\mathbb{R}_+$ and vice versa. For such a function and measure, related Lebesgue and Lebesgue-Stieltjes integrals are equivalent. Thus, all the above results can be stated for $Af(x)$ defined by

$$Af(x) = \frac{1}{M}\int_0^\infty f(tx)\,dm(t), \quad x \in \mathbb{R}_+,$$

so they refine and generalize inequality (1).

Another generalization of (1) was given by D. Luor [8] in a setting with σ-finite Borel measures μ and ν on a topological space X and a Borel probability measure λ on $\mathbb{R}_+$. The weighted version of that Luor's result is obtained in [5] in a setting with a topological space and σ-finite Borel measures as following.

Let λ be a finite Borel measure on $\mathbb{R}_+$. By supp λ we denote its support, that is, the set of all $t \in \mathbb{R}_+$ such that $\lambda(N_t) > 0$ holds for all open neighbourhoods N_t of t. Hence,

$$L = \int_{\operatorname{supp}\lambda} d\lambda(t) = \int_0^\infty d\lambda(t) = \lambda(\mathbb{R}_+) < \infty. \tag{3}$$

On the other hand, let X be a topological space equipped with a continuous scalar multiplication $(a,\mathbf{x}) \mapsto a\mathbf{x} \in X$, for $a \in \mathbb{R}_+$, $\mathbf{x} \in X$, such that

$$1\mathbf{x} = \mathbf{x}, \;\; a(b\mathbf{x}) = (ab)\mathbf{x}, \;\; \mathbf{x} \in X, \;\; a,b \in \mathbb{R}_+.$$

Further, let the Borel set $\Omega \subseteq X$ be λ-balanced, that is, $t\Omega = \{t\mathbf{x}\colon \mathbf{x} \in \Omega\} \subseteq \Omega$, for all $t \in \operatorname{supp}\lambda$. For a Borel measurable function $f\colon \Omega \to \mathbb{R}$, we define its Hardy–Littlewood average Af as

$$Af(\mathbf{x}) = \frac{1}{L}\int_0^\infty f(t\mathbf{x})\,d\lambda(t), \quad \mathbf{x} \in \Omega. \tag{4}$$

Finally, suppose that μ and ν are σ–finite Borel measures on X. For $t > 0$ and a Borel set $S \subseteq X$ we define

$$\mu_t(S) = \mu\left(\frac{1}{t}S\right). \tag{5}$$

Obviously, μ_t is a σ-finite Borel measure on X for each $t \in \mathbb{R}_+$. Throughout this paper, we suppose that the measures μ_t are absolutely continuous with respect to the measure ν, that is, $\mu_t \ll \nu$ for each $t \in \operatorname{supp}\lambda$. As usual, by $\frac{d\mu_t}{d\nu}$ we denote the related Radon–Nikodym derivative.

Thus, the following weighted general Boas-type inequality is given in [5].

THEOREM 1. *Let λ be a finite Borel measure on $\mathbb{R}_+$ and L be defined by* (3). *Let μ and ν be σ-finite Borel measures on a topological space X, μ_t be defined by* (5) *and such that $\mu_t \ll \nu$ for all $t \in \operatorname{supp} \lambda$. Further, let $\Omega \subseteq X$ be a λ-balanced set and u be a non-negative function on X, such that*

$$v(\mathbf{x}) = \int_0^\infty u\left(\frac{1}{t}\mathbf{x}\right) \frac{d\mu_t}{d\nu}(\mathbf{x})\, d\lambda(t) < \infty, \quad \mathbf{x} \in \Omega. \tag{6}$$

Suppose $\Phi\colon I \to \mathbb{R}$ is a non-negative convex function on an interval $I \subseteq \mathbb{R}$. If $f\colon \Omega \to \mathbb{R}$ is a Borel measurable function, such that $f(\mathbf{x}) \in I$ for all $\mathbf{x} \in \Omega$, and Af is defined by (4), *then $Af(\mathbf{x}) \in I$ for all $\mathbf{x} \in \Omega$ and the inequality*

$$\int_\Omega u(\mathbf{x})\Phi(Af(\mathbf{x}))\, d\mu(\mathbf{x}) \leqslant \frac{1}{L}\int_\Omega v(\mathbf{x})\Phi(f(\mathbf{x}))\, d\nu(\mathbf{x}) \tag{7}$$

holds. For a non-positive concave function Φ, the sign of inequality in (7) *is reversed.*

Notice that the condition on non-negativity of the convex function Φ in Theorem 1 can be omitted only in a particular setting with cones in X. More precisely, the following corollary holds.

COROLLARY 1. *If in Theorem 1 we have $t\Omega = \Omega$ for λ-a.e. $t \in \operatorname{supp} \lambda$, then* (7) *holds for all convex functions Φ on an interval $I \subseteq \mathbb{R}$. In that case, for all concave functions Φ relation* (7) *holds with the sign of inequality reversed.*

We will make further generalization based on the inequality (7). Instead of convex functions we will introduce a different class of functions, following the idea of I. A. Baloch et al. [1] and J. Pečarić et al. [10].

This paper is organized in following way: after the Introduction, in Section 2 we define class of functions $\mathscr{K}_1^c(I)$ and prove the Boas inequality of Levinson type for such functions. We point out the dual class of functions and corresponding dual inequality. We discuss 3-convexity at the point and give several one-dimensional results. In Section 3 we obtain multidimensional results and examples of Levinson type concerning balls in $\mathbb{R}^n$ centred at the origin and their dual sets.

CONVENTIONS. An interval I in $\mathbb{R}$ is any convex subset of $\mathbb{R}$, while by $\operatorname{Int} I$ we denote its interior. By $\mathbb{R}_+$ we denote the set of all positive real numbers i.e. $\mathbb{R}_+ = (0,\infty)$. A kth order divided difference of a function $f : I \to \mathbb{R}$, where I is an interval in $\mathbb{R}$, at distinct points $x_0,\dots,x_k \in I$ is defined recursively by

$$[x_i]f = f(x_i), \qquad \text{for} \quad i = 0,\dots,k$$

and

$$[x_0,\dots,x_k]f = \frac{[x_1,\dots,x_k]f - [x_0,\dots,x_{k-1}]f}{x_k - x_0}.$$

A function $f : I \to \mathbb{R}$ is called k-convex if $[x_0,\dots,x_k]f \geqslant 0$ for all choices of $k+1$ distinct points $x_0,\dots,x_k \in I$. If the kth derivative $f^{(k)}$ of a k-convex function exists, then $f^{(k)} \geqslant 0$, but $f^{(k)}$ may not exist (for properties of divided differences and k-convex

functions see [11]). For $R>0$ we denote by $B(R)$ a ball in $\mathbb{R}^n$ centred at the origin and of radius R, that is, $B(R)=\{\mathbf{x}\in\mathbb{R}^n\colon |\mathbf{x}|\leqslant R\}$, where $|\mathbf{x}|$ denotes the Euclidean norm of $\mathbf{x}\in\mathbb{R}^n$. By its complementary set we mean the set $\mathbb{R}^n\setminus B(R)=\{\mathbf{x}\in\mathbb{R}^n\colon |\mathbf{x}|>R\}$.

2. Main results

In order to make generalization of the inequality (7) in Levinson's sense we will replace convex functions with the following class of functions.

DEFINITION 1. Let $f:I\to\mathbb{R}$, where I is an interval in $\mathbb{R}$, be a function and $c\in \operatorname{Int} I$. We say that $f\in\mathscr{K}_1^c(I)$ (resp. $f\in\mathscr{K}_2^c(I)$) if there exists a constant α such that the function $F(x)=f(x)-\frac{\alpha}{2}x^2$ is concave (resp. convex) on $I\cap(-\infty,c]$ and convex (resp. concave) on $I\cap[c,\infty)$.

REMARK 1. If $f\in\mathscr{K}_i^c(a,b)$, $i=1,2$, and $f''(c)$ exists, then $f''(c)=\alpha$. Let $f\in\mathscr{K}_1^c(a,b)$. Due to the concavity and convexity of F for every distinct points $x_j\in(a,c]$ and $y_j\in[c,b)$, $j=1,2,3$, we have

$$[x_1,x_2,x_3]F=[x_1,x_2,x_3]f-\alpha\leqslant 0\leqslant[y_1,y_2,y_3]f-\alpha=[y_1,y_2,y_3]F.$$

Therefore, if $f''_-(c)$ and $f''_+(c)$ exist, letting $x_j\nearrow c$ and $y_j\searrow c$, we get

$$f''_-(c)\leqslant\alpha\leqslant f''_+(c).$$

Similary, for $f\in\mathscr{K}_2^c(a,b)$, we have $f''_+(c)\leqslant\alpha\leqslant f''_-(c)$. □

REMARK 2. Function $f:I\to\mathbb{R}$ is 3-convex (resp. 3-concave) if and only if $f\in\mathscr{K}_1^c(I)$ (resp. $f\in\mathscr{K}_2^c(I)$) for every $c\in\operatorname{Int} I$. In other words, a function is 3-convex on an interval if and only if it is 3-convex at every point of its interior, so the property from the definition of $\mathscr{K}_1^c(I)$ can be described as "3-convexity at point c".

For the main result we need another set of measures, sets and functions that also satisfying Theorem1. So, let $\hat{\lambda}$ be a finite Borel measure on $\mathbb{R}_+$ such that

$$\hat{L}=\int_0^\infty d\hat{\lambda}(t)=\int_{\operatorname{supp}\hat{\lambda}}d\hat{\lambda}(t)<\infty. \tag{8}$$

Let $\hat{\Omega}\subseteq X$ be a $\hat{\lambda}$-balanced Borel set, let measures $\hat{\mu}$, $\hat{\mu}_t, t\in\mathbb{R}_+$ and $\hat{\nu}$ be σ-finite Borel measures on X such that $\hat{\mu}_t(S)=\hat{\mu}\left(\frac{1}{t}S\right)$, for $t\in\mathbb{R}_+$ and $S\subseteq X$ Borel set and $\hat{\mu}_t\ll\hat{\nu}$, $t\in\operatorname{supp}\hat{\lambda}$. Finally, let $\hat{u}$ be a non-negative function on X, such that

$$\hat{\nu}(\mathbf{x})=\int_0^\infty\hat{u}\left(\frac{1}{t}\mathbf{x}\right)\frac{d\hat{\mu}_t}{d\hat{\nu}}(\mathbf{x})d\hat{\lambda}(t)<\infty,\ \mathbf{x}\in\hat{\Omega}. \tag{9}$$

For a Borel measurable function $g\colon\hat{\Omega}\to\mathbb{R}$ the Hardy-Littlewood average $\hat{A}g$ of g defined by

$$\hat{A}g(\mathbf{x})=\frac{1}{\hat{L}}\int_0^\infty g(t\mathbf{x})d\hat{\lambda}(t),\ \mathbf{x}\in\hat{\Omega}.$$

THEOREM 2. *Let X, Ω, λ, μ, ν, μ_t, L, u, v be as in Theorem 1. Furthermore, let $\hat{\Omega}$, $\hat{\lambda}$, $\hat{\mu}$, $\hat{\nu}$, $\hat{\mu}_t$, $\hat{L}$, $\hat{u}$, $\hat{v}$ be another set of measures and functions that satisfy Theorem 1. If $f\colon \Omega \to I \cap (-\infty, c]$ and $g\colon \hat{\Omega} \to I \cap [c, \infty)$ are measurable functions satisfying*

$$\begin{aligned}\int_{\Omega} u(\mathbf{x})(Af(\mathbf{x}))^2 d\mu(\mathbf{x}) - \frac{1}{L}\int_{\Omega} v(\mathbf{x}) f^2(\mathbf{x}) d\nu(\mathbf{x}) \\ = \int_{\hat{\Omega}} \hat{u}(\mathbf{x})(\hat{A}g(\mathbf{x}))^2 d\hat{\mu}(\mathbf{x}) - \frac{1}{\hat{L}}\int_{\hat{\Omega}} \hat{v}(\mathbf{x}) g^2(\mathbf{x}) d\hat{\nu}(\mathbf{x})\end{aligned} \tag{10}$$

then for every $\Phi \in \mathscr{K}_1^c(I)$ the following inequality holds

$$\begin{aligned}\int_{\hat{\Omega}} \hat{u}(\mathbf{x})\Phi(\hat{A}g(\mathbf{x})) d\hat{\mu}(\mathbf{x}) - \frac{1}{\hat{L}}\int_{\hat{\Omega}} \hat{v}(\mathbf{x})\Phi(g(\mathbf{x})) d\hat{\nu}(\mathbf{x}) \\ \leqslant \int_{\Omega} u(\mathbf{x})\Phi(Af(\mathbf{x})) d\mu(\mathbf{x}) - \frac{1}{L}\int_{\Omega} v(\mathbf{x})\Phi(f(\mathbf{x})) d\nu(\mathbf{x}).\end{aligned} \tag{11}$$

If $\Phi \in \mathscr{K}_2^c(I)$ in the above setting, then (11) holds with the sign of inequality reversed.

Proof. From Definition 1 there exists a constant α such that $F(x) = \Phi(x) - \frac{\alpha}{2}x^2$ is concave on $I \cap (-\infty, c]$ so we can apply Theorem 1 on the function F and get

$$\int_{\Omega} u(\mathbf{x}) F(Af(\mathbf{x})) d\mu(\mathbf{x}) - \frac{1}{L}\int_{\Omega} v(\mathbf{x}) F(f(\mathbf{x})) d\nu(\mathbf{x}) \geqslant 0$$

By the definition of the function F we have

$$\int_{\Omega} u(\mathbf{x})\left[\Phi(Af(\mathbf{x})) - \frac{\alpha}{2}(Af(\mathbf{x}))^2\right] d\mu(\mathbf{x}) - \frac{1}{L}\int_{\Omega} v(\mathbf{x})\left[\Phi(f(\mathbf{x})) - \frac{\alpha}{2}f^2(\mathbf{x})\right] d\nu(\mathbf{x}) \geqslant 0.$$

Since integral is a linear functional we can write

$$\begin{aligned}\int_{\Omega} u(\mathbf{x})\Phi(Af(\mathbf{x})) d\mu(\mathbf{x}) - \frac{1}{L}\int_{\Omega} v(\mathbf{x})\Phi(f(\mathbf{x})) d\nu(\mathbf{x}) \\ \geqslant \frac{\alpha}{2}\left[\int_{\Omega} u(\mathbf{x})(Af(\mathbf{x}))^2 d\mu(\mathbf{x}) - \frac{1}{L}\int_{\Omega} v(\mathbf{x}) f^2(\mathbf{x}) d\nu(\mathbf{x})\right].\end{aligned} \tag{12}$$

For the same constant α, the second part of Definition 1 gives us a convex function $F(x) = \Phi(x) - \frac{\alpha}{2}x^2$ on $I \cap [c, \infty)$. Now, from Theorem 1 we have

$$\int_{\hat{\Omega}} \hat{u}(\mathbf{x}) F(\hat{A}g(\mathbf{x})) d\hat{\mu}(\mathbf{x}) - \frac{1}{\hat{L}}\int_{\hat{\Omega}} \hat{v}(\mathbf{x}) F(g(\mathbf{x})) d\hat{\nu}(\mathbf{x}) \leqslant 0.$$

Similarly as in the first part of the proof, we obtain

$$\int_{\hat{\Omega}} \hat{u}(\mathbf{x})\left[\Phi(\hat{A}g(\mathbf{x})) - \frac{\alpha}{2}(\hat{A}g(\mathbf{x}))^2\right] d\hat{\mu}(\mathbf{x}) - \frac{1}{\hat{L}}\int_{\hat{\Omega}} \hat{v}(\mathbf{x})\left[\Phi(g(\mathbf{x})) - \frac{\alpha}{2}g^2(\mathbf{x})\right] d\hat{\nu}(\mathbf{x}) \leqslant 0$$

and also

$$\int_{\hat{\Omega}} \hat{u}(\mathbf{x})\Phi(\hat{A}g(\mathbf{x}))d\hat{\mu}(\mathbf{x}) - \frac{1}{\hat{L}}\int_{\hat{\Omega}} \hat{v}(\mathbf{x})\Phi(g(\mathbf{x}))d\hat{v}(\mathbf{x})$$
$$\leqslant \frac{\alpha}{2}\left[\int_{\hat{\Omega}} \hat{u}(\mathbf{x})(\hat{A}g(\mathbf{x}))^2 d\hat{\mu}(\mathbf{x}) - \frac{1}{\hat{L}}\int_{\hat{\Omega}} \hat{v}(\mathbf{x})g^2(\mathbf{x})d\hat{v}(\mathbf{x})\right]. \tag{13}$$

Due to assumption (10) the right hand sides of inequalities (12) and (13) are equal. Hence, we obtain (11). In the case $\Phi \in \mathscr{K}_2^c(I)$, the function $F(x) = \Phi(x) - \frac{\alpha}{2}x^2$ is convex on $I \cap (-\infty, c]$ and concave on $I \cap [c, \infty)$. Following the idea of the first part of the proof we get our statement. $\square$

Similarly as in [9] we analize α from the Definition 1.

REMARK 3. The assumption of equality (10) in Theorem 2 can be weakened. More concretely, if

(a) $\alpha \geqslant 0$ and

$$\int_{\Omega} u(\mathbf{x})(Af(\mathbf{x}))^2 d\mu(\mathbf{x}) - \frac{1}{L}\int_{\Omega} v(\mathbf{x})f^2(\mathbf{x})d\nu(\mathbf{x})$$
$$\geqslant \int_{\hat{\Omega}} \hat{u}(\mathbf{x})(\hat{A}g(\mathbf{x}))^2 d\hat{\mu}(\mathbf{x}) - \frac{1}{\hat{L}}\int_{\hat{\Omega}} \hat{v}(\mathbf{x})g^2(\mathbf{x})d\hat{v}(\mathbf{x}), \tag{14}$$

or

(b) $\alpha \leqslant 0$ and

$$\int_{\Omega} u(\mathbf{x})(Af(\mathbf{x}))^2 d\mu(\mathbf{x}) - \frac{1}{L}\int_{\Omega} v(\mathbf{x})f^2(\mathbf{x})d\nu(\mathbf{x})$$
$$\leqslant \int_{\hat{\Omega}} \hat{u}(\mathbf{x})(\hat{A}g(\mathbf{x}))^2 d\hat{\mu}(\mathbf{x}) - \frac{1}{\hat{L}}\int_{\hat{\Omega}} \hat{v}(\mathbf{x})g^2(\mathbf{x})d\hat{v}(\mathbf{x}), \tag{15}$$

then (11) holds. Indeed, if we multiply (14) with $\frac{\alpha}{2} \geqslant 0$ we get

$$\frac{\alpha}{2}\left[\int_{\Omega} u(\mathbf{x})(Af(\mathbf{x}))^2 d\mu(\mathbf{x}) - \frac{1}{L}\int_{\Omega} v(\mathbf{x})f^2(\mathbf{x})d\nu(\mathbf{x})\right]$$
$$\geqslant \frac{\alpha}{2}\left[\int_{\hat{\Omega}} \hat{u}(\mathbf{x})(\hat{A}g(\mathbf{x}))^2 d\hat{\mu}(\mathbf{x}) - \frac{1}{\hat{L}}\int_{\hat{\Omega}} \hat{v}(\mathbf{x})g^2(\mathbf{x})d\hat{v}(\mathbf{x})\right] \tag{16}$$

so we can chain inequalities (12) and (13) to get (11). In the case when we multiply (15) with $\frac{\alpha}{2} \leqslant 0$ we again get (16) and the conclusion is the same.

COROLLARY 2. *Let X, Ω, $\hat{\Omega}$, λ, $\hat{\lambda}$, μ, $\hat{\mu}$, ν, $\hat{\nu}$, μ_t, $\hat{\mu}_t$, L, $\hat{L}$, u, $\hat{u}$, v, $\hat{v}$ be as in Theorem 2 and assume that (10) holds. If Φ is 3-convex on the interval I, then (11) holds. If Φ is 3-concave, then (11) holds with the sign reversed.*

Proof. If Φ is 3-convex, then by Remark 2 it also belongs to $\mathscr{K}_1^c(I)$ for every $c \in Int\, I$, so we can again apply Theorem 2. $\square$

For Lebesgue measures and some intervention on the weight functions, from Theorem 2 we obtain the following result.

COROLLARY 3. *Let λ and $\hat{\lambda}$ be finite Borel measures on $\mathbb{R}_+$ and L and $\hat{L}$ be defined by (3) and (8) respectively. Let $\Omega \subseteq \mathbb{R}_+$ be a λ-balanced set such that $t\Omega = \Omega$ for λ-a.e. $t \in \sup \lambda$ and $\hat{\Omega} \subseteq \mathbb{R}_+$ be a $\hat{\lambda}$-balanced such that $t\hat{\Omega} = \hat{\Omega}$ for $\hat{\lambda}$-a.e. $t \in \sup \hat{\lambda}$. Suppose that u and $\hat{u}$ are non-negative functions on $\mathbb{R}_+$, such that*

$$w(x) = \int_0^\infty u\left(\frac{x}{t}\right) d\lambda(t) < \infty, \quad x \in \Omega$$

and

$$\hat{w}(x) = \int_0^\infty \hat{u}\left(\frac{x}{t}\right) d\hat{\lambda}(t) < \infty, \quad x \in \hat{\Omega}.$$

If $f\colon \Omega \to I \cap (-\infty, c]$ and $g\colon \hat{\Omega} \to I \cap [c, \infty)$ are measurable functions satisfying

$$\begin{aligned}\int_\Omega u(x)(Af(x))^2 \frac{dx}{x} - \frac{1}{L}\int_\Omega w(x) f^2(x) \frac{dx}{x} \\ = \int_{\hat{\Omega}} \hat{u}(x)(\hat{A}g(x))^2 \frac{dx}{x} - \frac{1}{\hat{L}}\int_{\hat{\Omega}} \hat{w}(x) g^2(x) \frac{dx}{x},\end{aligned}$$

the following inequality

$$\begin{aligned}\int_{\hat{\Omega}} \hat{u}(x)\Phi(\hat{A}g(x)) \frac{dx}{x} - \frac{1}{\hat{L}}\int_{\hat{\Omega}} \hat{w}(x)\Phi(g(x)) \frac{dx}{x} \\ \leqslant \int_\Omega u(x)\Phi(Af(x)) \frac{dx}{x} - \frac{1}{L}\int_\Omega w(x)\Phi(f(x)) \frac{dx}{x}\end{aligned} \tag{17}$$

holds for $\Phi \in \mathscr{K}_1^c(I)$. If $\Phi \in \mathscr{K}_2^c(I)$ in the above setting, then (17) holds with the sign of inequality reversed.

Proof. It follows directly from Theorem 2 if we set $X = \mathbb{R}_+$, the measures μ, ν, $\hat{\mu}$ and $\hat{\nu}$ to be the Lebesgue measures and replace the weight functions u and $\hat{u}$ with $x \mapsto \frac{u(x)}{x}$, $x \mapsto \frac{\hat{u}(x)}{x}$ respectively. For such measures we get $\frac{d\mu_t}{d\nu}(x) = \frac{d\hat{\mu}_t}{d\hat{\nu}}(x) = \frac{1}{t}$, $t \in \mathbb{R}_+$. In this setting, we have

$$v(x) = \int_0^\infty u\left(\frac{x}{t}\right) \cdot \frac{t}{x} \cdot \frac{1}{t}\, d\lambda(t) = \frac{1}{x}\int_0^\infty u\left(\frac{x}{t}\right) d\lambda(t) = \frac{w(x)}{x}, \quad x \in \Omega,$$

and $\hat{v}(x) = \frac{\hat{w}(x)}{x}$, $x \in \hat{\Omega}$ where the function v and $\hat{v}$ are defined by (6) and (9). $\square$

EXAMPLE 1. Consider the Theorem 2 with $X = \Omega = \mathbb{R}_+$ $d\lambda(t) = \chi_{(0,1)}(t)\, dt$. For $0 < b \leqslant \infty$, let $d\mu(x) = \chi_{(0,b)}(x)\, dx$, and $\nu(x) = dx$. Instead of the weight u

we take the function $x \mapsto \dfrac{u(x)}{x}\chi_{(0,b)}(x)$. Then supp $\lambda = (0,1]$, $L = 1$, $t\Omega = \Omega$ for $t \in$ supp λ, $\dfrac{d\mu_t}{d\nu}(x) = \dfrac{1}{t}\chi_{(0,tb)}(x)$,

$$Af(x) = \int_0^1 f(tx)\,dt = Hf(x),$$

and

$$v(x) = \int_0^1 \frac{u\left(\frac{1}{t}x\right)}{\frac{1}{t}x} \cdot \frac{1}{t}\chi_{(0,tb)}(x)\,dt = \frac{1}{x}\int_{\frac{x}{b}}^1 u\left(\frac{x}{t}\right)dt = \int_x^b u(y)\,\frac{dy}{y^2} = \frac{w(x)}{x},$$

for $x \in (0,b)$.

For measurable functions $f\colon \mathbb{R}_+ \to I \cap (-\infty, c]$ and $g\colon \hat{\Omega} \to I \cap [c,\infty)$ the condition (10) becomes

$$\begin{aligned}\int_0^b u(x)(Hf(x))^2\,\frac{dx}{x} - \int_0^b w(x)f^2(x)\,\frac{dx}{x}\\ = \int_{\hat{\Omega}} \hat{u}(x)(\hat{A}g(x))^2\,d\hat{\mu}(x) - \frac{1}{\hat{L}}\int_{\hat{\Omega}} \hat{v}(x)g^2(x)\,d\hat{\nu}(x),\end{aligned}$$

and for a function Φ from $\mathscr{K}_1^c(I)$ the following inequality

$$\begin{aligned}\int_{\hat{\Omega}} \hat{u}(x)\Phi(\hat{A}g(x))\,d\hat{\mu}(x) - \frac{1}{\hat{L}}\int_{\hat{\Omega}} \hat{v}(x)\Phi(g(x))\,d\hat{\nu}(x)\\ \leqslant \int_0^b u(x)\Phi(Hf(x))\,\frac{dx}{x} - \int_0^b w(x)\Phi(f(x))\,\frac{dx}{x}\end{aligned} \tag{18}$$

holds. If Φ is from $\mathscr{K}_2^c(I)$, then the sign of inequality (18) is reversed.

On the other hand, we have dual example.

EXAMPLE 2. Let $X = \hat{\Omega} = \mathbb{R}_+$ and $d\hat{\lambda}(t) = \chi_{[1,\infty)}(t)\dfrac{dt}{t^2}$ in the Theorem 2. For $0 \leqslant b < \infty$, let $\hat{u}\colon (b,\infty) \to \mathbb{R}$ be a non-negative locally integrable function on its domain. Let $d\hat{\mu}(x) = \chi_{(b,+\infty)}(x)dx$ and $d\hat{\nu}(x) = dx$. Then we get a dual result to (18) (see also [3, 4, 6]). So supp $\hat{\lambda} = [1,\infty)$, $\hat{L} = 1$, $\hat{w}(x) = \dfrac{1}{x}\displaystyle\int_b^x \hat{u}(t)\,dt$ and

$$\hat{A}g(x) = \int_1^\infty g(tx)\frac{dt}{t^2} = x\int_x^\infty g(t)\,\frac{dt}{t^2} = \hat{H}g(x), \quad x \in (b,\infty).$$

For measurable functions $f\colon \Omega \to I \cap (-\infty, c]$ and $g\colon \hat{\Omega} \to I \cap [c,\infty)$ the condition (10) becomes

$$\begin{aligned}\int_\Omega u(x)(Af(x))^2\,d\mu(x) - \frac{1}{L}\int_\Omega v(x)f^2(x)d\nu(x)\\ = \int_0^\infty \hat{u}(x)(\hat{H}g(x))^2\,\frac{dx}{x} - \int_0^\infty \hat{w}(x)g^2(x)\,\frac{dx}{x},\end{aligned}$$

and for $\Phi \in \mathscr{K}_1^c(I)$ the following inequality

$$\int_0^\infty \hat{u}(x)\Phi(\hat{H}g(x))\,\frac{dx}{x} - \int_0^\infty \hat{w}(x)\Phi(g(x))\,\frac{dx}{x} \leqslant \int_\Omega u(x)\Phi(Af(x))\,d\mu(x) - \frac{1}{L}\int_\Omega v(x)\Phi(f(x))\,d\nu(x) \tag{19}$$

holds. If $\Phi \in \mathscr{K}_2^c(I)$, then the sign of inequality (19) is reversed.

3. Multidimensional examples

In Corollary 1 the condition $t\Omega = \Omega$, λ-a.e. $t \in \operatorname{supp}\lambda$ is emphasized, so the logical choice of the multidimensional examples is setting with balls in $\mathbb{R}^n$ centred at the origin.

COROLLARY 4. *Suppose that $0 < b \leqslant \infty$ and that a positive function ψ on $[0,1]$ and a non-negative function u on $\mathbb{R}^n$ are such that*

$$v(\mathbf{x}) = \int_{\frac{|\mathbf{x}|}{b}}^1 u\left(\frac{1}{t}\mathbf{x}\right) t^{-n}\psi(t)\,dt < \infty, \quad \mathbf{x} \in B(b) \tag{20}$$

and

$$P_1 = \int_0^1 \psi(t)\,dt < \infty. \tag{21}$$

If $f\colon B(b) \to I \cap (-\infty, c]$ and $g\colon \hat{\Omega} \to I \cap [c,\infty)$ are measurable functions satisfying

$$\frac{1}{P_1^2}\int_{B(b)} u(\mathbf{x})\left(\int_0^1 \psi(t)f(t\mathbf{x})dt\right)^2 d\mathbf{x} - \frac{1}{P_1}\int_{B(b)} v(\mathbf{x})f^2(\mathbf{x})d\mathbf{x} = \int_{\hat{\Omega}} \hat{u}(\mathbf{x})(\hat{A}g(\mathbf{x}))^2 d\hat{\mu}(\mathbf{x}) - \frac{1}{\hat{L}}\int_{\hat{\Omega}} \hat{v}(\mathbf{x})g^2(\mathbf{x})d\hat{v}(\mathbf{x}), \tag{22}$$

then for $\Phi \in \mathscr{K}_1^c(I)$ the inequality

$$\int_{\hat{\Omega}} \hat{u}(\mathbf{x})\Phi(\hat{A}g(\mathbf{x}))d\hat{\mu}(\mathbf{x}) - \frac{1}{\hat{L}}\int_{\hat{\Omega}} \hat{v}(\mathbf{x})\Phi(g(\mathbf{x}))d\hat{v}(\mathbf{x}) \leqslant \int_{B(b)} u(\mathbf{x})\Phi\left(\frac{1}{P_1}\int_0^1 \psi(t)f(t\mathbf{x})dt\right)d\mathbf{x} - \frac{1}{P_1}\int_{B(b)} v(\mathbf{x})\Phi(f(\mathbf{x}))d\mathbf{x} \tag{23}$$

holds.

Proof. Follows from Theorem 2 rewritten with $X = \mathbb{R}^n$, $\Omega = B(b)$, $d\lambda(t) = \psi(t)\chi_{(0,1)}(t)\,dt$, $d\mu(\mathbf{x}) = \chi_{B(b)}(\mathbf{x})\,d\mathbf{x}$, and $d\nu(\mathbf{x}) = d\mathbf{x}$. Here we have $\operatorname{supp}\lambda = (0,1]$, $\dfrac{d\mu_t}{d\nu}(\mathbf{x}) = t^{-n}\chi_{B(tb)}(\mathbf{x})$, and $Af(\mathbf{x}) = \dfrac{1}{P_1}\displaystyle\int_0^1 \psi(t)f(t\mathbf{x})\,dt$. It is easy to see that in this setting (20) reduces to (6), and (10) and (11) becomes (22) and (23). $\square$

Applying Corollary 4 to some particular u and Φ we get the following result.

EXAMPLE 3. Apply Corollary 4 for $u(\mathbf{x}) \equiv 1$ and the 3-convex function $\Phi(x) = x^p$, $p > 2$ or $p \in (0,1)$. In this setting, if $f\colon B(b) \to I \cap (-\infty, c]$ and $g\colon \hat{\Omega} \to I \cap [c, \infty)$ are measurable functions satisfying

$$\frac{1}{P_1^2}\int_{B(b)}\left(\int_0^1 \psi(t) f(t\mathbf{x})dt\right)^2 d\mathbf{x} - \frac{1}{P_1}\int_{B(b)} v(\mathbf{x}) f^2(\mathbf{x}) d\mathbf{x}$$
$$= \int_{\hat{\Omega}} \hat{u}(\mathbf{x})(\hat{A}g(\mathbf{x}))^2 d\hat{\mu}(\mathbf{x}) - \frac{1}{\hat{L}}\int_{\hat{\Omega}} \hat{v}(\mathbf{x}) g^2(\mathbf{x}) d\hat{\nu}(\mathbf{x}),$$

then the following inequality

$$\int_{\hat{\Omega}} \hat{u}(\mathbf{x})(\hat{A}g(\mathbf{x}))^p d\hat{\mu}(\mathbf{x}) - \frac{1}{\hat{L}}\int_{\hat{\Omega}} \hat{v}(\mathbf{x}) g^p(\mathbf{x}) d\hat{\nu}(\mathbf{x})$$
$$\leqslant \frac{1}{P_1^p}\int_{B(b)}\left(\int_0^1 \psi(t) f(t\mathbf{x})dt\right)^p d\mathbf{x} - \frac{1}{P_1}\int_{B(b)} v(\mathbf{x}) f^p(\mathbf{x}) d\mathbf{x}$$

holds, where P_1 is defined by (21). Notice that $\Phi(x) = x^p$, $p \in (1,2)$ or $p < 0$ is a 3-concave function.

Similarly, we get the dual result by using the set $\mathbb{R}^n \setminus B(b)$.

COROLLARY 5. *Suppose that $0 \leqslant b < \infty$ and that the positive function ψ on $[1,\infty)$ and the non-negative function u on $\mathbb{R}^n$ are such that*

$$\hat{v}(\mathbf{x}) = \int_1^{\frac{|\mathbf{x}|}{b}} \hat{u}\left(\frac{1}{t}\mathbf{x}\right) t^{-n}\psi(t)\, dt < \infty, \quad \mathbf{x} \in \mathbb{R}^n \setminus B(b) \tag{24}$$

and

$$P_\infty = \int_1^\infty \psi(t)\, dt < \infty. \tag{25}$$

If $f\colon \Omega \to I \cap (-\infty, c]$ and $g\colon \mathbb{R}^n \setminus B(b) \to I \cap [c, \infty)$ are measurable functions satisfying

$$\int_\Omega u(\mathbf{x})(Af(\mathbf{x}))^2 d\mu(\mathbf{x}) - \frac{1}{L}\int_\Omega v(\mathbf{x}) f^2(\mathbf{x}) d\nu(\mathbf{x})$$
$$= \frac{1}{P_\infty^2}\int_{\mathbb{R}^n\setminus B(b)} \hat{u}(\mathbf{x})\left(\int_1^\infty \psi(t) g(t\mathbf{x})dt\right)^2 d\mathbf{x} - \frac{1}{P_\infty}\int_{\mathbb{R}^n\setminus B(b)} \hat{v}(\mathbf{x}) g^2(\mathbf{x}) d\mathbf{x} \tag{26}$$

then for $\Phi \in \mathscr{K}_1^c(I)$ the following inequality

$$\int_{\mathbb{R}^n\setminus B(b)} \hat{u}(\mathbf{x})\Phi\left(\frac{1}{P_\infty}\int_1^\infty \psi(t) g(t\mathbf{x})dt\right) d\mathbf{x} - \frac{1}{P_\infty}\int_{\mathbb{R}^n\setminus B(b)} \hat{v}(\mathbf{x})\Phi(g(\mathbf{x})) d\mathbf{x}$$
$$\leqslant \int_\Omega u(\mathbf{x})\Phi(Af(\mathbf{x})) d\mu(\mathbf{x}) - \frac{1}{L}\int_\Omega v(\mathbf{x})\Phi(f(\mathbf{x})) d\nu(\mathbf{x}) \tag{27}$$

holds.

Proof. The proof follows from Theorem 2 if we set $d\hat{\lambda}(t) = \psi(t)\chi_{(1,\infty)}(t)\,dt$, $X = \mathbb{R}^n$, $\hat{\Omega} = \mathbb{R}^n \setminus B(b)$, $d\hat{\mu}(\mathbf{x}) = \chi_{\mathbb{R}^n\setminus B(b)}(\mathbf{x})\,d\mathbf{x}$ and $d\hat{\nu}(\mathbf{x}) = d\mathbf{x}$. Then we get $\operatorname{supp}\hat{\lambda} = [1,\infty)$, $\dfrac{d\hat{\mu}_t}{d\hat{\nu}}(\mathbf{x}) = t^{-n}\chi_{\mathbb{R}^n\setminus B(tb)}(\mathbf{x})$ and $\hat{A}g(\mathbf{x}) = \dfrac{1}{P_\infty}\displaystyle\int_1^\infty \psi(t)g(t\mathbf{x})\,dt$. So (6), (10) and (11) become (24), (26) and (27), respectively. $\square$

EXAMPLE 4. Apply Corollary 5 for $\hat{u}(\mathbf{x}) \equiv 1$ and the 3-convex function $\Phi(x) = x^p$, $p > 2$ or $p \in (0,1)$. If $f\colon \Omega \to I \cap (-\infty, c]$ and $g\colon \mathbb{R}^n \setminus B(b) \to I \cap [c,\infty)$ are measurable functions satisfying

$$\begin{aligned}&\int_\Omega u(\mathbf{x})(Af(\mathbf{x}))^2 d\mu(\mathbf{x}) - \frac{1}{L}\int_\Omega v(\mathbf{x})f^2(\mathbf{x})d\nu(\mathbf{x})\\ &\quad= \frac{1}{P_\infty^2}\int_{\mathbb{R}^n\setminus B(b)}\left(\int_1^\infty \psi(t)g(t\mathbf{x})dt\right)^2 d\mathbf{x} - \frac{1}{P_\infty}\int_{\mathbb{R}^n\setminus B(b)}\hat{v}(\mathbf{x})g^2(\mathbf{x})d\mathbf{x},\end{aligned}$$

then the following inequality

$$\begin{aligned}&\int_{\mathbb{R}^n\setminus B(b)}\left(\frac{1}{P_\infty}\int_1^\infty \psi(t)g(t\mathbf{x})dt\right)^p d\mathbf{x} - \frac{1}{P_\infty}\int_{\mathbb{R}^n\setminus B(b)}\hat{v}(\mathbf{x})g^p(\mathbf{x})d\mathbf{x}\\ &\quad\leqslant \int_\Omega u(\mathbf{x})(Af(\mathbf{x}))^p d\mu(\mathbf{x}) - \frac{1}{L}\int_\Omega v(\mathbf{x})f^p(\mathbf{x})d\nu(\mathbf{x})\end{aligned}$$

holds, where P_∞ is defined by (25).

REFERENCES

[1] I. A. BALOCH, J. PEČARIĆ, M. PRALJAK, *Generalization of Levinson's inequality*, J. Math. Inequal. **9** (2) (2015), 571–586

[2] R. P. BOAS, *Some integral inequalities related to Hardy's inequality*, J. Anal. Math. **23** (1970), 53–63.

[3] A. ČIŽMEŠIJA, S. HUSSAIN, AND J. PEČARIĆ, *Some new refinements of Hardy and Pólya–Knopp's inequalities*, J. Funct. Spaces Appl. **7** (2) (2009), 167–186.

[4] A. ČIŽMEŠIJA, J. PEČARIĆ, AND L.-E. PERSSON, *On strengthened Hardy and Pólya-Knopp's inequalities*, J. Approx. Theory **125** (2003), 74–84.

[5] A. ČIŽMEŠIJA, J. PEČARIĆ, D. POKAZ, *A new general Boas-type inequality and related Cauchy-type means*, Math. Inequal. Appl., **12** (3) (2012), 599–617.

[6] S. KAIJSER, L. NIKOLOVA, L. E. PERSSON, AND A. WEDESTIG, *Hardy-Type Inequalities via Convexity*, Math. Inequal. Appl., **8** (2005), 403–417.

[7] N. LEVINSON, *Generalizations of an Inequality of Hardy*, Duke Math. J. **31** (1964), 389–394.

[8] D. LUOR, *Modular inequalities for the Hardy-Littlewood averages*, Math. Inequal. Appl. **13** (3) (2010), 635–642.

[9] K. KRULIĆ HIMMELREICH, J. PEČARIĆ, D. POKAZ, M. PRALJAK, *New results about Hardy-type inequality*, J. Math. Inequal., **9** (4) (2015), 1259-1269.

[10] J. PEČARIĆ, M. PRALJAK, A. WITKOWSKI, *Generalized Levinson's inequality and exponential convexity*, Opuscula Math., **35** (1) (2015), 397–410.
[11] J. PEČARIĆ, FRANK PROSCHAN, Y. L. TONG, *Convex Functions, Partial Orderings and Statistical Applications*, Academic Press, San Diego, 1992.

(Received April 1, 2016)

Josip Pečarić
Faculty of Textile Technology, University of Zagreb
Prilaz baruna Filipovića 28a, 10000 Zagreb, Croatia
e-mail: pecaric@element.hr

Dora Pokaz
Faculty of Civil Engineering, University of Zagreb
Kačićeva 26, 10000 Zagreb, Croatia
e-mail: dora@grad.hr

Marjan Praljak
Faculty of Food Technology and Biotechnology, University of Zagreb
Pierottijeva 6, 10000 Zagreb, Croatia
e-mail: mpraljak@pbf.hr

Mathematical
Inequalities
& Applications
Volume 19, Number 4 (2016), 1375–1385 doi:10.7153/mia-19-101

INEQUALITIES AND BOUNDS FOR A CERTAIN BIVARIATE ELLIPTIC MEAN

EDWARD NEUMAN

(*Communicated by S. Varošanec*)

Abstract. This paper deals with a new mean introduced recently by this author. This mean is a degenerate case of the completely symmetric elliptic integral of the second kind. In particular inequalities involving mean under discussion are obtained. Also, bounds in the mean in question are obtained. Bounding expressions are convex combinations of some quantities depending on variables of the mean.

1. Introduction and notation

In recent years certain bivariate means have been investigated extensively by several researchers. A complete list of research papers which deal with this subject is too long to be included here even if we would restrict our attention to papers published in the last ten years. The goal of this paper is to obtain inequalities and optimal bounds for the particular mean introduced recently by this author (see [15]). Its definition is included below (see (2)). In what follows the letters a and b will always stand for positive and unequal numbers.

First we recall definition of the Schwab-Borchardt mean of a and b:

$$SB(a,b) \equiv SB = \begin{cases} \dfrac{\sqrt{b^2-a^2}}{\cos^{-1}(a/b)} & \text{if } a<b, \\ \dfrac{\sqrt{a^2-b^2}}{\cosh^{-1}(a/b)} & \text{if } a>b \end{cases} \tag{1}$$

(see, e.g., [2], [3]). This mean has been studied extensively in [19], [20] and in [8]. It is well known that the mean SB is strict, nonsymmetric and homogeneous of degree one in its variables.

Mean SB can also be expressed in terms of the degenerated completely symmetric elliptic integral of the first kind (see, e.g., [15]). It has been pointed out in [19] that some well known bivariate means such as logarithmic mean and two Seiffert means (see [23, 24]) can be represented by the Schwab-Borchardt mean of two simpler means such as geometric and arithmetic means or as the Schwab-Borchardt mean of arithmetic and the square - mean root mean. This idea was utilized lately by this author and other

Mathematics subject classification (2010): 26E60, 26D05.
Keywords and phrases: Bivariate elliptic means, inequalities, Ky Fan inequalities.

Paper MIA-19-101

researchers as well. For more details the interested reader is referred to [4, 5, 6, 7, 8, 9, 10, 13, 14, 18, 21, 22, 25, 26]

The mean studied in this paper is defined as follows:

$$N(a,b) \equiv N = \frac{1}{2}\left(a + \frac{b^2}{SB(a,b)}\right) \tag{2}$$

(see [15]). It's easy to see that mean N is also strict, nonsymmetric and homogeneous of degree one in its variables. Some authors call this mean, Neuman mean of the second kind (see, e.g., [5, 7, 21, 22, 25, 26]). Mean N can also be represented in terms of the degenerated completely symmetric elliptic integral of the second kind (see, e.g., [15]). By taking the N-mean of two other means one can generate several new bivariate means. This idea was utilized in [15].

This paper can be regarded as continuation of investigations initiated in author's earlier papers [18, 8, 15, 11, 10, 9, 13, 16, 14, 12, 17] and is organized as follows. Some preliminary results and formulas needed in this paper are given in Section 2. Inequalities involving mean N are derived in Section 3. Bounds for the mean under discussion are obtained in Section 4. The Ky Fan type inequalities are established in Section 5.

2. Preliminary results and formulas needed in this paper

First of all let us record another formulas for means SB and N. Those will be utilized frequently in susequent sections of this paper.

One can easily verify that (1) implies

$$SB(a,b) \equiv SB = \begin{cases} b\dfrac{\sin r}{r} = a\dfrac{\tan r}{r} & \text{if } a < b, \\ b\dfrac{\sinh s}{s} = a\dfrac{\tanh s}{s} & \text{if } b < a, \end{cases} \tag{3}$$

where

$$\cos r = a/b \qquad \text{if} \qquad a < b \qquad \text{and} \qquad \cosh s = a/b \qquad \text{if} \qquad a > b. \tag{4}$$

Clearly

$$0 < r < \frac{\pi}{2} \tag{5}$$

and

$$s > 0. \tag{6}$$

Corresponding formulas for the mean N, obtained with the aid of (2) and (3), read as follows:

$$N(a,b) \equiv N = \frac{1}{2}b\left(\cos r + \frac{r}{\sin r}\right) = \frac{1}{2}a\left(1 + \frac{r}{\sin r \cos r}\right) \tag{7}$$

provided $a < b$. Similarly, if $a > b$, then

$$N(a,b) \equiv N = \frac{1}{2}b\left(\cosh s + \frac{s}{\sinh s}\right) = \frac{1}{2}a\left(1 + \frac{s}{\sinh s \cosh s}\right). \tag{8}$$

Here the domains for r and s are the same as these in (5) and (6).

For later use let

$$v = \frac{a-b}{a+b}. \tag{9}$$

Clearly $0 < |v| < 1$.

The unweighted arithmetic mean A of a and b is defined as

$$A = \frac{a+b}{2}.$$

For the reader's convenience let us recall definitions of the first and the second Seiffert means, denoted by P and T, respectively, the Neuman-Sándor mean M, and the logarithmic mean L:

$$\begin{aligned} P &= A\frac{v}{\sin^{-1} v}, \quad T = A\frac{v}{\tan^{-1} v}, \\ M &= A\frac{v}{\sinh^{-1} v}, \quad L = A\frac{v}{\tanh^{-1} v}, \end{aligned} \tag{10}$$

(see [23], [24], [19]).

We will also utilize the l'Hôpital Monotone Rule [1]:

Let $c,d \in \mathbb{R}$ $(c < d)$ and let $f,g : [c,d] \to \mathbb{R}$ be continuous functions that are differentiable on (c,d). Assume that $g'(x) \neq 0$ for each $x \in (c,d)$. If f'/g' is increasing (decreasing) on (c,d), then so are $\dfrac{f(x)-f(c)}{g(x)-g(c)}$ and $\dfrac{f(x)-f(d)}{g(x)-g(d)}$. If monotonicity of f'/g' is strict, then so is monotonicity of two functions represented by the above quotients.

3. Inequalities involving mean N

The goal of this section is to establish two inequalities which connect the Schwab-Borchardt mean SB with the mean N. We have the following:

THEOREM 1. *Let $a,b > 0$, $a \neq b$. Then*

$$SB(a,b) < \frac{a+2b}{3} < \frac{b+N(b,a)}{2} < N(a,b). \tag{11}$$

If $a > b$, then

$$N(a,b) < A < SB(b,a). \tag{12}$$

Proof. The first inequality in (11) has been established in [19]. In the proof of the second inequality in (11) we apply the following one

$$\frac{b+2a}{3} < N(b,a)$$

(see [15]) to the third member of (11) to obtain the desired result. The third inequality in (11) appears in [15, Theorem 4.1]. It is included here for the sake of completeness. For the proof of the first inequality in (12) we use the first part of (8) together with the formula $\cosh s = a/b$ to obtain

$$N(a,b) = \frac{1}{2}\left(a + b\frac{s}{\sinh s}\right)$$

Taking into account that $(s/\sinh s) < 1$ we obtain the desired inequality $N(a,b) < A$. For the proof of the second inequality in (12) we will utilize the invariance property of the Schwab-Borchardt mean

$$SB(A, \sqrt{Aa}) = SB(b,a) \tag{13}$$

(see [2, 3]) and the inequality [19]:

$$(xy^2)^{1/3} < SB(x,y) \tag{14}$$

$(x,y > 0, x \neq y)$. In (14) we let $x = A$ and $y = \sqrt{Aa}$ and next apply (13) to obtain

$$A^{2/3}a^{1/3} < SB(b,a). \tag{15}$$

The assumption that $a > b$ yields $A < a$. This in conjunction with (15) gives the desired inequality $A < SB(b,a)$. This completes the proof of the second inequality in (12). □

4. Bounds for N

For the sake of presentation we introduce two auxiliary functions

$$\Phi_1(r) = \frac{2\sin r - \sin r\cos r - r}{2(\sin r)(1-\cos r)} \tag{16}$$

$(0 < r < \pi/2)$ and

$$\Psi_1(s) = \frac{s + \sinh s\cosh s - 2\sinh s}{2(\sinh s)(\cosh s - 1)} \tag{17}$$

$(s > 0)$. It is known [15] that the function $\Phi_1(r)$ is strictly decreasing while the function $\Psi_1(s)$ is strictly increasing. Moreover, $\Phi_1(0^+) = 1/3$ and $\Phi_1(\pi/2) = 1 - \pi/4$. Also, $\Psi_1(0^+) = 1/3$ and $\Psi_1(\infty^-) = 1/2$.

We are in a position to establish the following:

THEOREM 2. *If $a < b$, then the simultaneous inequality*

$$\alpha a + (1-\alpha)b < N(a,b) < \beta a + (1-\beta)b \tag{18}$$

holds true if

$$\alpha \geqslant \frac{1}{3} \quad \textit{and} \quad \beta \leqslant 1 - \frac{\pi}{4} = 0.214\ldots. \tag{19}$$

If $a > b$, then the inequality (18) is valid if

$$\alpha \leqslant \frac{1}{3} \quad \textit{and} \quad \beta \geqslant \frac{1}{2}. \tag{20}$$

Proof. We shall prove first the theorem in the case when $a < b$. It follows from (18) that

$$\beta < \frac{N/b - 1}{a/b - 1} < \alpha. \tag{21}$$

Utilizing (7) and the first formula in (4) we can write (21) as follows

$$\beta < 1 - \frac{\pi}{4} \leqslant \Phi_1(r) \leqslant \frac{1}{3} < \alpha.$$

Hence the assertion follows. Assume now that $a > b$. We follow the idea used in the first part of this proof. Let us note that in this case inequalities in (21) are reversed, i.e. we have $\alpha < \Psi_1(s) < \beta$. Combining this with relevant parts of l'Hôpital Monotone Rule yields

$$\alpha < \frac{1}{3} \leqslant \Psi_1(s) \leqslant \frac{1}{2} < \beta.$$

The proof is complete. □

In the proof of the next result we will utilize the following function

$$\Phi_2(r) = \frac{r^2 + r\sin r\cos r - 2\sin^2 r}{2(\sin r)(r - \sin r)} \tag{22}$$

$(0 < r < \pi/2)$.

Our next task is to determine all the parameters α and β for which the following inequality

$$\alpha b + (1-\alpha)SB(a,b) < N(a,b) < \beta b + (1-\beta)SB(a,b), \tag{23}$$

is satisfied for positive numbers a and b which satisfy the condition $a < b$.

We shall prove now the following:

THEOREM 3. *Inequality (23) holds true if*

$$\alpha \leqslant 0 \quad \textit{and} \quad \beta \geqslant \frac{\pi^2 - 8}{4\pi - 8} = 0.409\ldots. \tag{24}$$

Proof. Let $a<b$. Making use of (3) and (7) we can easily show that the two-sided inequality (23) can be written in the form

$$\alpha<\Phi_2(r)<\beta. \tag{25}$$

Taking into account that the function $\Phi_2(r)$ is strictly increasing (see [22, Lemma 2.4]) and also that $\Phi_2(0^+)=0$ and $\Phi_2(\pi/2)=(\pi^2-8)/(4\pi-8))$ we conclude, using (25), that conditions (24) must be satisfied in order for the inequality (23) to be valid. □

We shall now illustrate the last result with the following:

EXAMPLE 1. Let A and G stand for the unweighted arithmetic and geometric means of two positive unequal numbers, and also let P be the first Seiffert mean of the same numbers. Writing N_{GA} for $N(G,A)$ we obtain using (23) and the fact that $P=SB(G,A)$

$$\alpha A+(1-\alpha)P<N_{GA}<\beta A+(1-\beta)P,$$

where α and β must to satisfy conditions (24). In particular, with $\alpha=0$ and $\beta=\frac{1}{2}$, we obtain the inequality

$$P<N_{GA}<\frac{1}{2}(A+P)$$

which is a possibly a new one.

We shall discuss now a problem of finding bounds for $N(a,b)$ in the form of geometric means of a and b:

$$a^{\alpha}b^{1-\alpha}<N(a,b)<a^{\beta}b^{1-\beta}. \tag{26}$$

We have the following:

THEOREM 4. *If $a<b$, then the inequality (26) is satisfied for all numbers α and β such that $\alpha\geqslant 1/3$ and $\beta\leqslant 0$. Otherwise, if $a>b$, then (26) is valid if $\alpha\leqslant 1/3$ and $\beta\geqslant 1$.*

Proof. For the proof of the first part of the assertion we rewrite (26) a as follows

$$\beta<\frac{\log(N/b)}{\log(a/b)}<\alpha, \tag{27}$$

where $N\equiv N(a,b)$. Using (4) and (7) we write the above two-sided inequality as

$$\beta<\Phi_3(r)<\alpha$$

where

$$\Phi_3(r)=\frac{\log(\sin 2r+2r)-\log(2\sin r)-\log 2}{\log(\cos r)}$$

$(0<r<\pi/2)$. It is known (see [6, Lemma 2.3]) that the function $\Phi_3(r)$ is strictly decreasing on $(0,\pi/2)$. Moreover, $0\leqslant\Phi_3(r)\leqslant 1/3$ on the stated domain. Hence the assertion follows.

The second part of the thesis can be established in a similar manner. Using (26) we have

$$\alpha < \frac{\log(N/b)}{\log(a/b)} < \beta$$

Utilizing (4) and (8) we can write the above inequality in the form

$$\alpha < \Psi_3(s) < \beta,$$

where

$$\Psi_3(s) = \frac{\log(\sinh 2s + 2s) - \log(2\sinh s) - \log 2}{\log(\cosh s)}$$

$(s > 0)$. Making use of Lemma 2.4 in [6] we conclude that the function $\Psi_3(s)$ is strictly increasing provided $s > 0$ and also that $1/3 \leqslant \Psi_3(s) \leqslant 1$. The assertion now follows. The proof is complete. $\square$

We shall now deal with problems of finding bounds for the reciprocals of the mean N in terms of reciprocals of its variables a and b. Let now $a < b$. More exactly we are looking for all numbers α and β for which the inequality

$$\alpha\frac{1}{a} + (1-\alpha)\frac{1}{b} < \frac{1}{N} < \beta\frac{1}{a} + (1-\beta)\frac{1}{b} \tag{28}$$

holds true.

THEOREM 5. *If $a < b$, then the inequality (28) is satisfied provided $\alpha \leqslant 0$ and $\beta \geqslant 1/3$. Otherwise, if $a > b$, then the inequalities (28) hold true if $\alpha \geqslant 1$ and $\beta \leqslant 1/3$.*

Proof. It is easy to see that (28) is equivalent to

$$\alpha < \frac{\frac{a}{b}}{1-\frac{a}{b}} \frac{1-\frac{N}{b}}{\frac{N}{b}} < \beta$$

provided $a < b$. Let us denote the second member of the above inequality by Φ_4. Then utilizing (4) and (7) we get

$$\Phi_4 \equiv \Phi_4(r) = \frac{\cos r}{1-\cos r} \frac{2\sin r - \sin r\cos r - r}{\sin r\cos r + r}$$

$(0 < r < \pi/2)$. Making use of Lemma 2.8 in [4] we conclude that the function $\Phi_4(r)$ is strictly decreasing on its domain and also that $\Phi_4(0^+) = 1/3$ and $\Phi_4(\pi/2) = 0$. This yields

$$\alpha < 0 \leqslant \Phi_4(r) \leqslant 1/3 < \beta \tag{29}$$

This completes the proof of the first part of the thesis of our theorem.

Assume now that $a > b$. It is easy to see that the two-sided inequality (28) can be written as

$$\beta < \frac{a/b}{1-a/b}\frac{1-N/b}{N/b} < \alpha.$$

Denote the middle member of the above inequality by $\Psi_4 \equiv \Psi_4(s)$ $(s > 0)$. Using (4) and (8) we get

$$\Psi_4(s) = \frac{\cosh(s)}{1-\cosh s}\frac{2\sinh(s) - \sinh s \cosh s - s}{\sinh s \cosh s + s}.$$

Making use of Lemma 2.6 in [4] we conclude that the function $\Psi_4(s)$ is strictly increasing for all $s > 0$ and also that $\Psi_4(0^+) = 1/3$. and $\Psi_4(\infty^-) = 1$. Hence the assertion follows. $\square$

5. The Ky Fan inequalities involving mean N

Ky Fan inequalities for various pairs of means have been a subject of many research papers published in mathematical literature. The Ky Fan inequalities for the Schwab-Borchardt mean are derived in [19] while the Ky Fan inequalities for particular means derived from the N mean are established in [15].

The goal of this section is to establish Ky Fan inequalities for the means $N(a,b)$ and $N(b,a)$. Before we will state and prove the main result of this section let us introduce more notation. To this end we will assume that $0 < a, b \leqslant \frac{1}{2}$. Also, let $a' = 1-a$ and $b' = 1-b$. Research in this section is motivated by validity of the inequality [15, Theorem 4.1]:

$$b < N(a,b) < N(b,a) < a$$

provided $b < a$. It is natural to ask whether this inequality has its counterpart in the form of Ky Fan inequality? The answer is provided in the following:

THEOREM 6. *Let* $0 < b < a \leqslant \frac{1}{2}$. *Then the inequalities*

$$\frac{b}{b'} < \frac{N(a,b)}{N(a',b')} < \frac{N(b,a)}{N(b',a')} < \frac{a}{a'} \tag{30}$$

are valid. Inequalities (30) are reversed if $0 < a < b \leqslant \frac{1}{2}$.

Proof. It is elementary to show that assumption $0 < b < a \leqslant \frac{1}{2}$ implies the inequality

$$\frac{b}{b'} < \frac{a}{a'}. \tag{31}$$

We shall establish now inequalities (30). For, let us write the leftmost inequality in (30) as follows

$$\frac{N(a',b')}{b'} < \frac{N(a,b)}{b}$$

and also introduce f_1, where

$$f_1 = \frac{N(a,b)}{b}.$$

Application of (8) gives

$$f_1 \equiv f_1(s) = \frac{\sinh s \cosh s + s}{2\sinh s} =: \frac{n_1(s)}{d_1(s)},$$

where $\cosh s = a/b$. It is known that the function $f_1(s)$ is even and strictly increasing for $s > 0$ (see [15, p. 287]). Let s' be defined implicitly as $\cosh s' = a'/b'$. Then (31) implies $\cosh s' < \cosh s$ and this in turn yields $s' < s$. Further, monotonicity of f_1 gives $f_1(s') < f_1(s)$ or what is the same that

$$\frac{N(a',b')}{b'} < \frac{N(a,b)}{b}.$$

Hence the first inequality in (30) follows. For the proof of the second inequality in (30) we introduce

$$f_2 = \frac{N(b,a)}{N(a,b)}.$$

Using (7) and (8) we obtain

$$f_2 = \frac{\sin r \cos r + r}{(\sin r)\left(1 + \dfrac{s}{\sinh s \cosh s}\right)}. \tag{32}$$

Taking into account that $\cosh s = \sec r$ we obtain $\sinh s = \tan r$ and $s = \cosh^{-1}(\sec r)$. With the aid of these formulas we can write (32) as

$$f_2(r) = \frac{\sin r \cos r + r}{\sin r + \cos^2 r \cosh^{-1}(\sec r)} =: \frac{n_2(r)}{d_2(r)}$$

$(0 < r < \pi/2)$. We shall show now that the function $f_2(r)$ is strictly increasing on its domain. Differentiating we obtain

$$\left(\frac{n_2'(r)}{d_2'(r)}\right)' = \frac{\cosh^{-1}(\sec r)}{[(\sin r)\cosh^{-1}(\sec r) - 1]^2} > 0.$$

Thus the function $\frac{n_2'(r)}{d_2'(r)}$ is strictly increasing. Using l'Hôpital Monotone Rule we conclude that the function $f_2 = \frac{n_2(r)}{d_2(r)}$ is also strictly increasing. Thus $f_2(s') < f_2(s)$. The last inequality can be written in terms of the mean N as

$$\frac{N(b',a')}{N(a',b')} < \frac{N(b,a)}{N(a,b)}$$

which gives the second inequality in (30). In the proof of the third inequality in (30) we shall use quantity f_3, where

$$f_3 = \frac{a}{N(b,a)}.$$

Making use of (7) we obtain

$$f_3 \equiv f_3(r) = \frac{2\sin r}{\sin r\cos r + r} =: \frac{n_3(r)}{d_3(r)}$$

$(0 < r < \pi/2)$. It follows from the proof of Theorem 6.1 in [15] that $f_3(r)$ is strictly increasing on $0 < r < \pi/2$. This in turn implies that $f_3(s') < f_3(s)$. Thus the last inequality gives

$$\frac{a'}{N(b',a')} < \frac{a}{N(b,a)}.$$

The third inequality in (30) now follows. The second assertion of the Theorem 6 can be derived from the first one. It is easy to see that replacing a by b and b' by a' gives the desired result. Let us note that the assumption $0 < a < b \leqslant \frac{1}{2}$ yields

$$\frac{b}{b'} > \frac{a}{a'}.$$

The proof is complete. □

REFERENCES

[1] G. D. ANDERSON, M. K. VAMANAMURTHY, M. VUORINEN, *Monotonicity rules in calculus*, Amer. Math. Monthly **133** (2006), 805–816.

[2] J. M. BORWEIN, P. B. BORWEIN, *Pi and the AGM – A Study in Analytic Number Theory and Computational Complexity*, Wiley, New York, 1987.

[3] B. C. CARLSON, *Algorithms involving arithmetic and geometric means*, Amer. Math. Monthly **78** (1971), 496–505.

[4] S.-B. CHEN, Z.-Y. HE, Y.-M. CHU, Y.-Q. SONG, X.-J. TAO, *Note on certain inequalities for Neuman means*, J. Inequal. Appl. **2014** 2014:370, 10 pages.

[5] Z.-J. GUO, Y.-M. CHU, Y.-Q. SONG, X.-J. TAO, *Sharp bounds for Neuman means by harmonic, arithmetic, and contra-harmonic means*, Abstr. Appl. Anal. Volume **2014**, Article ID914242, 8 pages.

[6] Z.-J. GUO, Y. ZHANG, Y.-M. CHU, Y.-Q. SONG, *Sharp bounds for Neuman means in terms of geometric, arithmetic and quadratic means*, arXiv: 1405, 4384v1, May 2014.

[7] Y.-M. LI, B.-Y. LONG, Y.-M. CHU, *Sharp bounds for the Neuman-Sándor mean in terms of generalized logarithmic mean*, J. Math. Inequal. **4**, 4 (2012), 567–577.

[8] E. NEUMAN, *Inequalities for the Schwab-Borchardt mean and their applications*, J. Math. Inequal. **5**, 4 (2011), 601–609.

[9] E. NEUMAN, *A note on a certain bivariate mean*, J. Math. Inequal. **6**, 4 (2012), 637–643.

[10] E. NEUMAN, *Sharp inequalities involving Neuman-Sándor and logarithmic means*, J. Math. Inequal. **7**, 3 (2013), 413–419.

[11] E. NEUMAN, *Inequalities involving certain bivariate means*, J. Inequal. Spec. Functions **4**, 4 (2013), 12–20.

[12] E. NEUMAN, *A one-parameter family of bivariate mean*, J. Math. Inequal. **7**, 3 (2013), 399–412.

[13] E. NEUMAN, *On some means derived from the Schwab-Borchardt mean*, J. Math. Inequal. **8**, 1 (2014), 171–183.

[14] E. NEUMAN, *On some means derived from the Schwab-Borchardt mean II*, J. Math. Inequal. **8**, 2 (2014), 361–370.

[15] E. NEUMAN, *On a new bivariate mean*, Aequat. Math. **88** (2014), 277–289.

[16] E. NEUMAN, *Inequalities involving generalized trigonometric and hyperbolic functions*, J. Math. Inequal. **8**, 4 (2014), 725–736.

[17] E. NEUMAN, *Optimal bounds for certain bivariate means*, Issues of Analysis. **7** (21), 1 (2014), 35–43.

[18] E. NEUMAN, *On a new bivariate mean II*, Aequat. Math. **89** (2015), 1031–1040.
[19] E. NEUMAN, J. SÁNDOR, *On the Schwab-Borchardt mean*, Math. Pannon. **14**, 2 (2003), 253–266.
[20] E. NEUMAN, J. SÁNDOR, *On the Schwab-Borchardt mean II*, Math. Pannon. **17**, 1 (2006), 49–59.
[21] W.-M. QIAN, Y.-M. CHU, *Refinements and bounds for Neuman means in terms of arithmetic and contra-harmonic means*, J. Math. Inequal. **9**, 3 (2015), 873–881.
[22] W.-M. QIAN, Z.-H. SHAO, Y.-M. CHU, *Sharp inequalities involving Neuman means of the second kind and other bivariate means*, J. Math. Inequal. **9**, 2 (2015), 531–540.
[23] H.-J. SEIFFERT, *Problem 887*, Nieuw. Arch. Wisk. **11** (1993), 176.
[24] H.-J. SEIFFERT, *Aufgabe 16*, Würzel **29** (1995), 87.
[25] Y. ZHANG, Y.-M. CHU, Y.-L. JIANG, *Sharp geometric mean bounds for Neuman mean*, Abstr. Appl. Anal., Volume **2014**, Article ID 949815, 6 pages.
[26] T.-H. ZHAO, Y.-M. CHU, B.-Y. LIU, *Optimal bounds for Neuman-Sándor mean in terms of arithmetic and contra-harmonic means*, Abstr. Appl. Anal., Volume **2012**, Article ID 302635, 9 pages.

(Received April 6, 2016)

Edward Neuman
Mathematical Research Institute
144 Hawthorn Hollow, Carbondale, IL 62903
e-mail: edneuman76@gmail.com

Mathematical Inequalities & Applications
www.ele-math.com
mia@ele-math.com

Mathematical
Inequalities
& Applications
Volume 19, Number 4 (2016), 1387–1398 doi:10.7153/mia-19-102

GENERALIZATION OF THE JENSEN–MERCER INEQUALITY BY TAYLOR'S POLYNOMIAL

A. MATKOVIĆ

(*Communicated by S. Varošanec*)

Abstract. We present generalizations of the Jensen-Mercer inequality for the class of n-convex functions, obtained by using Taylor's polynomial and Green function. By applying those inequalities we obtain some results related to Čebyšev functionals.

1. Introduction

In paper [1] the following integral version of the Jensen-Mercer inequality for convex functions was proved.

THEOREM A. *Let $g:[a,b]\to\mathbb{R}$ be a continuous and monotonic function and $[\alpha,\beta]$ be an interval such that the image of g is a subset of $[\alpha,\beta]$. Let function $\lambda:[a,b]\to\mathbb{R}$ be either continuous or of bounded variation satisfying*

$$\lambda(a)\leqslant\lambda(t)\leqslant\lambda(b)\ \text{ for all }\ t\in[\alpha,\beta],\quad \lambda(b)-\lambda(a)>0. \tag{1}$$

Then for every continuous convex function $\varphi:[\alpha,\beta]\to\mathbb{R}$ the inequality

$$\varphi\left(\alpha+\beta-\frac{\int_a^b g(x)\,\mathrm{d}\lambda(x)}{\int_a^b \mathrm{d}\lambda(x)}\right)\leqslant\varphi(\alpha)+\varphi(\beta)-\frac{\int_a^b \varphi(g(x))\,\mathrm{d}\lambda(x)}{\int_a^b \mathrm{d}\lambda(x)} \tag{2}$$

holds.

REMARK 1. Inequality (2) is also valid when the condition (1) is replaced with the more strict condition that λ is a nondecreasing function such that $\lambda(a)\neq\lambda(b)$.

Let us recall the definition of n-convex functions (see [7, pp. 14–15]).

DEFINITION 1. A function $f:[a,b]\to\mathbb{R}$ is said to be n-convex on $[a,b]$, $n\geqslant 0$, if for all choices of $(n+1)$ distinct points in $[a,b]$, the n-th divided difference of f satisfies $f[x_0,\dots,x_n]\geqslant 0$. If this inequality is reversed, then f is said to be n-concave. If the inequality is strict, then f is said to be a strictly n-convex (n-concave) function.

Mathematics subject classification (2010): 26D15, 26D20.
Keywords and phrases: Jensen-Mercer inequality, n-convex functions, exponential convexity.
This work has been fully supported by Croatian Science Foundation under the project 5435.

Paper MIA-19-102

The *divided difference* of order n of the function $f:[a,b]\to\mathbb{R}$ at distinct points $x_0,\dots,x_n\in[a,b]$ is defined recursively by

$$f[x_i]=f(x_i),\qquad (i=0,\dots,n)$$

and

$$f[x_0,\dots,x_n]=\frac{f[x_1,\dots,x_n]-f[x_0,\dots,x_{n-1}]}{x_n-x_0}.$$

The value $f[x_0,\dots,x_n]$ is independent of the order of the points $x_0,\dots,x_n$.

Note that 0-convex functions are non-negative functions, 1-convex functions are increasing functions and 2-convex functions are simply convex functions.

Consider the Green function G defined on $[\alpha,\beta]\times[\alpha,\beta]$ by

$$G(t,s)=\begin{cases}\frac{(t-\beta)(s-\alpha)}{\beta-\alpha} & \text{for } \alpha\leqslant s\leqslant t,\\ \frac{(s-\beta)(t-\alpha)}{\beta-\alpha} & \text{for } t\leqslant s\leqslant\beta.\end{cases}\tag{3}$$

The Green function is continuous and convex in s and, since it is symmetric, also in t.

It can be easily shown by integrating by parts that every function $\varphi:[\alpha,\beta]\to\mathbb{R}$, $\varphi\in C^2([\alpha,\beta])$ can be represented in the form

$$\varphi(x)=\frac{\beta-x}{\beta-\alpha}\varphi(\alpha)+\frac{x-\alpha}{\beta-\alpha}\varphi(\beta)+\int_\alpha^\beta G(x,s)\,\varphi''(s)\,\mathrm{d}s.\tag{4}$$

LEMMA 1. *Let $g:[a,b]\to\mathbb{R}$ be a continuous and monotonic function, and $[\alpha,\beta]$ be an interval such that the image of g is a subset of $[\alpha,\beta]$. Let function $\lambda:[a,b]\to\mathbb{R}$ be either continuous or of bounded variation satisfying (1), and G the Green function defined by (3). Then for every function $\varphi\in C^2([\alpha,\beta])$ the identity*

$$\begin{aligned}&\varphi\left(\alpha+\beta-\frac{\int_a^b g(x)\,\mathrm{d}\lambda(x)}{\int_a^b\mathrm{d}\lambda(x)}\right)-\left(\varphi(\alpha)+\varphi(\beta)-\frac{\int_a^b\varphi(g(x))\,\mathrm{d}\lambda(x)}{\int_a^b\mathrm{d}\lambda(x)}\right)\\&=\int_\alpha^\beta\left[G\left(\alpha+\beta-\frac{\int_a^b g(x)\,\mathrm{d}\lambda(x)}{\int_a^b\mathrm{d}\lambda(x)},s\right)+\frac{\int_a^b G(g(x),s)\,\mathrm{d}\lambda(x)}{\int_a^b\mathrm{d}\lambda(x)}\right]\varphi''(s)\,\mathrm{d}s\end{aligned}\tag{5}$$

holds.

Proof. Using (4) we obtain

$$\begin{aligned}&\varphi\left(\alpha+\beta-\frac{\int_a^b g(x)\,\mathrm{d}\lambda(x)}{\int_a^b\mathrm{d}\lambda(x)}\right)-\left(\varphi(\alpha)+\varphi(\beta)-\frac{\int_a^b\varphi(g(x))\,\mathrm{d}\lambda(x)}{\int_a^b\mathrm{d}\lambda(x)}\right)\\&=\left(\frac{\int_a^b g(x)\,\mathrm{d}\lambda(x)}{\int_a^b\mathrm{d}\lambda(x)}-\alpha\right)\frac{\varphi(\alpha)}{\beta-\alpha}+\left(\beta-\frac{\int_a^b g(x)\,\mathrm{d}\lambda(x)}{\int_a^b\mathrm{d}\lambda(x)}\right)\frac{\varphi(\beta)}{\beta-\alpha}\\&\quad+\int_\alpha^\beta G\left(\alpha+\beta-\frac{\int_a^b g(x)\,\mathrm{d}\lambda(x)}{\int_a^b\mathrm{d}\lambda(x)},s\right)\varphi''(s)\,\mathrm{d}s-(\varphi(\alpha)+\varphi(\beta))\\&\quad+\frac{\int_a^b\left[\frac{\beta-g(x)}{\beta-\alpha}\varphi(\alpha)+\frac{g(x)-\alpha}{\beta-\alpha}\varphi(\beta)+\int_\alpha^\beta G(g(x),s)\,\varphi''(s)\,\mathrm{d}s\right]\mathrm{d}\lambda(x)}{\int_a^b\mathrm{d}\lambda(x)}.\end{aligned}$$

Since

$$\left(\frac{\int_a^b g(x)\,\mathrm{d}\lambda(x)}{\int_a^b \mathrm{d}\lambda(x)}-\alpha\right)\frac{\varphi(\alpha)}{\beta-\alpha}+\left(\beta-\frac{\int_a^b g(x)\,\mathrm{d}\lambda(x)}{\int_a^b \mathrm{d}\lambda(x)}\right)\frac{\varphi(\beta)}{\beta-\alpha}-(\varphi(\alpha)+\varphi(\beta))$$
$$+\frac{\int_a^b\left[\frac{\beta-g(x)}{\beta-\alpha}\varphi(\alpha)+\frac{g(x)-\alpha}{\beta-\alpha}\varphi(\beta)\right]\mathrm{d}\lambda(x)}{\int_a^b \mathrm{d}\lambda(x)}$$
$$=\frac{1}{\beta-\alpha}\left[\frac{\int_a^b g(x)\,\mathrm{d}\lambda(x)}{\int_a^b \mathrm{d}\lambda(x)}\varphi(\alpha)-\alpha\varphi(\alpha)+\beta\varphi(\beta)-\frac{\int_a^b g(x)\,\mathrm{d}\lambda(x)}{\int_a^b \mathrm{d}\lambda(x)}\varphi(\beta)\right.$$
$$-\beta\varphi(\alpha)-\beta\varphi(\beta)+\alpha\varphi(\alpha)+\alpha\varphi(\beta)+\beta\varphi(\alpha)-\frac{\int_a^b g(x)\,\mathrm{d}\lambda(x)}{\int_a^b \mathrm{d}\lambda(x)}\varphi(\alpha)$$
$$\left.+\frac{\int_a^b g(x)\,\mathrm{d}\lambda(x)}{\int_a^b \mathrm{d}\lambda(x)}\varphi(\beta)-\alpha\varphi(\beta)\right]=0,$$

(5) immediately follows. □

In the rest of the paper, for the sake of simplicity, let us denote

$$\mathscr{G}(s)=G\left(\alpha+\beta-\frac{\int_a^b g(x)\,\mathrm{d}\lambda(x)}{\int_a^b \mathrm{d}\lambda(x)},s\right)+\frac{\int_a^b G(g(x),s)\,\mathrm{d}\lambda(x)}{\int_a^b \mathrm{d}\lambda(x)}. \tag{6}$$

2. Generalizations by Taylor's polynomial

In this section we generalize inequality (2) for n-convex functions using the following Taylor's formula with the integral remainder.

Let n be a positive integer, function $\varphi:[\alpha,\beta]\to\mathbb{R}$ such that $\varphi^{(n-1)}$ is absolutely continuous, and $c\in[\alpha,\beta]$. Then for all $x\in[\alpha,\beta]$

$$\varphi(x)=T_{n-1}(\varphi;c,x)+R_{n-1}(\varphi;c,x) \tag{7}$$

holds, where

$$T_{n-1}(\varphi;c,x)=\sum_{k=0}^{n-1}\frac{\varphi^{(k)}(c)}{k!}(x-c)^k \tag{8}$$

is Taylor's polynomial of degree $n-1$, and the remainder is given by

$$R_{n-1}(\varphi;c,x)=\frac{1}{(n-1)!}\int_c^x \varphi^{(n)}(t)(x-t)^{n-1}\,\mathrm{d}t. \tag{9}$$

Applying Taylor's formula at the points α and β respectively we get

$$\varphi(x)=\sum_{k=0}^{n-1}\frac{\varphi^{(k)}(\alpha)}{k!}(x-\alpha)^k+\frac{1}{(n-1)!}\int_\alpha^\beta \varphi^{(n)}(t)\left((x-t)_+\right)^{n-1}\mathrm{d}t, \tag{10}$$

and

$$\varphi(x)=\sum_{k=0}^{n-1}\frac{\varphi^{(k)}(\beta)}{k!}(-1)^k(\beta-x)^k-\frac{1}{(n-1)!}\int_\alpha^\beta(-1)^{n-1}\varphi^{(n)}(t)\left((t-x)_+\right)^{n-1}\mathrm{d}t, \tag{11}$$

where

$$(x-t)_+=\begin{cases}x-t, & t\leqslant x,\\ 0, & t>x\end{cases}. \tag{12}$$

Note that for $n\geqslant 1$ function $\left((x-t)_+\right)^{n-1}$ is convex in x and in t.

Applying Taylor's formula (7) for φ'', we can get the following identities.

LEMMA 2. *Let functions $g:[a,b]\to\mathbb{R}$, $\lambda:[a,b]\to\mathbb{R}$ be as in Lemma 1, and $\mathscr{G}:[\alpha,\beta]\to\mathbb{R}$ defined by (6). Then for every function $\varphi:[\alpha,\beta]\to\mathbb{R}$ such that $\varphi^{(n-1)}$ is absolutely continuous for some $n\geqslant 3$, the identities*

$$\begin{aligned}&\varphi\left(\alpha+\beta-\frac{\int_a^b g(x)\,\mathrm{d}\lambda(x)}{\int_a^b\mathrm{d}\lambda(x)}\right)-\left(\varphi(\alpha)+\varphi(\beta)-\frac{\int_a^b\varphi(g(x))\,\mathrm{d}\lambda(x)}{\int_a^b\mathrm{d}\lambda(x)}\right)\\&=\sum_{k=0}^{n-3}\frac{\varphi^{(k+2)}(\alpha)}{k!}\int_\alpha^\beta\mathscr{G}(s)(s-\alpha)^k\,\mathrm{d}s\\&\quad+\frac{1}{(n-3)!}\int_\alpha^\beta\left(\int_t^\beta\mathscr{G}(s)(s-t)^{n-3}\,\mathrm{d}s\right)\varphi^{(n)}(t)\,\mathrm{d}t,\end{aligned} \tag{13}$$

and

$$\begin{aligned}&\varphi\left(\alpha+\beta-\frac{\int_a^b g(x)\,\mathrm{d}\lambda(x)}{\int_a^b\mathrm{d}\lambda(x)}\right)-\left(\varphi(\alpha)+\varphi(\beta)-\frac{\int_a^b\varphi(g(x))\,\mathrm{d}\lambda(x)}{\int_a^b\mathrm{d}\lambda(x)}\right)\\&=\sum_{k=0}^{n-3}\frac{\varphi^{(k+2)}(\beta)}{k!}(-1)^k\int_\alpha^\beta\mathscr{G}(s)(\beta-s)^k\mathrm{d}s\\&\quad-\frac{1}{(n-3)!}\int_\alpha^\beta\left(\int_\alpha^t\mathscr{G}(s)(s-t)^{n-3}\,\mathrm{d}s\right)\varphi^{(n)}(t)\mathrm{d}t\end{aligned} \tag{14}$$

hold.

Proof. Applying Taylor's formula (7) for φ'', at the points α and β, respectively, and replacing n by $n-2$ $(n\geqslant 3)$ we have

$$\varphi''(s)=\sum_{k=0}^{n-3}\frac{\varphi^{(k+2)}(\alpha)}{k!}(s-\alpha)^k+\frac{1}{(n-3)!}\int_\alpha^s\varphi^{(n)}(t)(s-t)^{n-3}\,\mathrm{d}t, \tag{15}$$

and

$$\varphi''(s)=\sum_{k=0}^{n-3}\frac{\varphi^{(k+2)}(\beta)}{k!}(-1)^k(\beta-s)^k-\frac{1}{(n-3)!}\int_s^\beta\varphi^{(n)}(t)(s-t)^{n-3}\,\mathrm{d}t. \tag{16}$$

Using (15) in (5) we get

$$\varphi\left(\alpha+\beta-\frac{\int_a^b g(x)\,\mathrm{d}\lambda(x)}{\int_a^b \mathrm{d}\lambda(x)}\right)-\left(\varphi(\alpha)+\varphi(\beta)-\frac{\int_a^b \varphi(g(x))\,\mathrm{d}\lambda(x)}{\int_a^b \mathrm{d}\lambda(x)}\right)$$
$$=\sum_{k=0}^{n-3}\frac{\varphi^{(k+2)}(\alpha)}{k!}\int_\alpha^\beta \mathscr{G}(s)(s-\alpha)^k\,\mathrm{d}s+\frac{1}{(n-3)!}\int_\alpha^\beta \mathscr{G}(s)\left(\int_\alpha^s \varphi^{(n)}(t)(s-t)^{n-3}\,\mathrm{d}t\right)\mathrm{d}s.$$

Applying Fubini's theorem we obtain (13). Analogously using (16) in (5) and applying Fubini's theorem we obtain (14). □

LEMMA 3. *Let $g:[a,b]\to\mathbb{R}$ and $\lambda:[a,b]\to\mathbb{R}$ be as in Lemma 1. Then for every function $\varphi:[\alpha,\beta]\to\mathbb{R}$ such that $\varphi^{(n-1)}$ is absolutely continuous for some $n\geqslant 1$ the identities*

$$\varphi\left(\alpha+\beta-\frac{\int_a^b g(x)\,\mathrm{d}\lambda(x)}{\int_a^b \mathrm{d}\lambda(x)}\right)-\left(\varphi(\alpha)+\varphi(\beta)-\frac{\int_a^b \varphi(g(x))\,\mathrm{d}\lambda(x)}{\int_a^b \mathrm{d}\lambda(x)}\right)$$
$$=\sum_{k=1}^{n-1}\frac{\varphi^{(k)}(\alpha)}{k!}\left[\left(\beta-\frac{\int_a^b g(x)\,\mathrm{d}\lambda(x)}{\int_a^b \mathrm{d}\lambda(x)}\right)^k-(\beta-\alpha)^k+\frac{\int_a^b (g(x)-\alpha)^k\,\mathrm{d}\lambda(x)}{\int_a^b \mathrm{d}\lambda(x)}\right]$$
$$+\frac{1}{(n-1)!}\int_\alpha^\beta\left[\left(\left(\alpha+\beta-\frac{\int_a^b g(x)\,\mathrm{d}\lambda(x)}{\int_a^b \mathrm{d}\lambda(x)}-t\right)_+\right)^{n-1}\right.$$
$$\left.-(\beta-t)^{n-1}+\frac{\int_a^b \left((g(x)-t)_+\right)^{n-1}\mathrm{d}\lambda(x)}{\int_a^b \mathrm{d}\lambda(x)}\right]\varphi^{(n)}(t)\,\mathrm{d}t, \tag{17}$$

and

$$\varphi\left(\alpha+\beta-\frac{\int_a^b g(x)\,\mathrm{d}\lambda(x)}{\int_a^b \mathrm{d}\lambda(x)}\right)-\left(\varphi(\alpha)+\varphi(\beta)-\frac{\int_a^b \varphi(g(x))\,\mathrm{d}\lambda(x)}{\int_a^b \mathrm{d}\lambda(x)}\right)$$
$$=\sum_{k=1}^{n-1}\frac{\varphi^{(k)}(\beta)}{k!}(-1)^k\left[\left(\frac{\int_a^b g(x)\,\mathrm{d}\lambda(x)}{\int_a^b \mathrm{d}\lambda(x)}-\alpha\right)^k-(\beta-\alpha)^k+\frac{\int_a^b (\beta-g(x))^k\,\mathrm{d}\lambda(x)}{\int_a^b \mathrm{d}\lambda(x)}\right]$$
$$-\frac{1}{(n-1)!}\int_\alpha^\beta(-1)^{n-1}\left[\left(\left(t-\alpha-\beta+\frac{\int_a^b g(x)\,\mathrm{d}\lambda(x)}{\int_a^b \mathrm{d}\lambda(x)}\right)_+\right)^{n-1}\right.$$
$$\left.-(t-\alpha)^{n-1}+\frac{\int_a^b \left((t-g(x))_+\right)^{n-1}\mathrm{d}\lambda(x)}{\int_a^b \mathrm{d}\lambda(x)}\right]\varphi^{(n)}(t)\,\mathrm{d}t \tag{18}$$

hold.

Proof. Using formula (10) and the facts that $(\alpha-t)_+=0$ and $(\beta-t)_+=\beta-t$

for $t \in [\alpha, \beta]$, we have

$$\begin{aligned}
&\varphi\left(\alpha+\beta-\frac{\int_a^b g(x)\,\mathrm{d}\lambda(x)}{\int_a^b \mathrm{d}\lambda(x)}\right)-\left(\varphi(\alpha)+\varphi(\beta)-\frac{\int_a^b \varphi(g(x))\,\mathrm{d}\lambda(x)}{\int_a^b \mathrm{d}\lambda(x)}\right)\\
&=\sum_{k=0}^{n-1}\frac{\varphi^{(k)}(\alpha)}{k!}\left(\beta-\frac{\int_a^b g(x)\,\mathrm{d}\lambda(x)}{\int_a^b \mathrm{d}\lambda(x)}\right)^k\\
&\quad+\frac{1}{(n-1)!}\int_\alpha^\beta \varphi^{(n)}(t)\left(\left(\alpha+\beta-\frac{\int_a^b g(x)\,\mathrm{d}\lambda(x)}{\int_a^b \mathrm{d}\lambda(x)}-t\right)_+\right)^{n-1}\mathrm{d}t\\
&\quad-\varphi(\alpha)-\sum_{k=0}^{n-1}\frac{\varphi^{(k)}(\alpha)}{k!}(\beta-\alpha)^k-\frac{1}{(n-1)!}\int_\alpha^\beta \varphi^{(n)}(t)(\beta-t)^{n-1}\,\mathrm{d}t\\
&\quad+\sum_{k=0}^{n-1}\frac{\varphi^{(k)}(\alpha)}{k!}\frac{\int_a^b (g(x)-\alpha)^k\,\mathrm{d}\lambda(x)}{\int_a^b \mathrm{d}\lambda(x)}\\
&\quad+\frac{1}{(n-1)!}\int_\alpha^\beta \varphi^{(n)}(t)\frac{\int_a^b \left((g(x)-t)_+\right)^{n-1}\mathrm{d}\lambda(x)}{\int_a^b \mathrm{d}\lambda(x)}\mathrm{d}t.
\end{aligned}$$

By regrouping and canceling all the first members in the above sums we obtain (17). Analogously using formula (11) we obtain (18). □

Using Lemmas 2 and 3 we can get the following generalizations of the Jensen-Mercer inequality for n-convex functions.

THEOREM 1. *Let $g : [a,b] \to \mathbb{R}$ be a continuous and monotonic function, and $[\alpha,\beta]$ be an interval such that the image of g is a subset of $[\alpha,\beta]$. Let $\lambda : [a,b] \to \mathbb{R}$ be either continuous or of bounded variation satisfying (1), and $\mathscr{G} : [\alpha,\beta] \to \mathbb{R}$ defined by (6). Let $\varphi : [\alpha,\beta] \to \mathbb{R}$ be a n-convex function such that $\varphi^{(n-1)}$ is absolutely continuous for some $n \geqslant 3$.*

(*i*) *Then the inequality*

$$\begin{aligned}
&\varphi\left(\alpha+\beta-\frac{\int_a^b g(x)\,\mathrm{d}\lambda(x)}{\int_a^b \mathrm{d}\lambda(x)}\right)-\left(\varphi(\alpha)+\varphi(\beta)-\frac{\int_a^b \varphi(g(x))\,\mathrm{d}\lambda(x)}{\int_a^b \mathrm{d}\lambda(x)}\right)\\
&\leqslant\sum_{k=0}^{n-3}\frac{\varphi^{(k+2)}(\alpha)}{k!}\int_\alpha^\beta \mathscr{G}(s)(s-\alpha)^k\,\mathrm{d}s
\end{aligned}\tag{19}$$

holds. Moreover, if $\varphi^{(k)}(\alpha) \geqslant 0$ for $k = 2,3,\ldots,n-1$, then the right hand side of (19) is negative or equals zero and (2) holds.

(*ii*) *If n is even then the inequality*

$$\varphi\left(\alpha+\beta-\frac{\int_a^b g(x)\,\mathrm{d}\lambda(x)}{\int_a^b \mathrm{d}\lambda(x)}\right)-\left(\varphi(\alpha)+\varphi(\beta)-\frac{\int_a^b \varphi(g(x))\,\mathrm{d}\lambda(x)}{\int_a^b \mathrm{d}\lambda(x)}\right)$$
$$\leqslant \sum_{k=0}^{n-3}\frac{\varphi^{(k+2)}(\beta)}{k!}(-1)^k\int_\alpha^\beta \mathscr{G}(s)(\beta-s)^k\,\mathrm{d}s \tag{20}$$

holds. Moreover, if $\varphi^{(k)}(\beta)\geqslant 0$ for $k=2,4,\ldots,n-2$ and $\varphi^{(k)}(\beta)\leqslant 0$ for $k=3,5,\ldots,n-1$, then the right hand side of (20) *is negative or equals zero and* (2) *holds.*

(*iii*) *If n is odd then the reversed inequality* (20) *holds. Moreover, if $\varphi^{(k)}(\beta)\leqslant 0$ for $k=2,4,\ldots,n-1$ and $\varphi^{(k)}(\beta)\geqslant 0$ for $k=3,5,\ldots,n-2$, then the right hand side of the reversed inequality* (20) *is nonnegative and reverse inequality in* (2) *holds.*

Proof. Since the Green function G is convex and $G(\alpha,s)=G(\beta,s)=0$, from Theorem A follows

$$\mathscr{G}(s)=G\left(\alpha+\beta-\frac{\int_a^b g(x)\,\mathrm{d}\lambda(x)}{\int_a^b \mathrm{d}\lambda(x)},s\right)+\frac{\int_a^b G(g(x),s)\,\mathrm{d}\lambda(x)}{\int_a^b \mathrm{d}\lambda(x)}\leqslant 0.$$

Hence, if n is even then

$$\int_t^\beta \mathscr{G}(s)(s-t)^{n-3}\,\mathrm{d}s\leqslant 0,\quad \text{for } t\leqslant s\leqslant\beta, \tag{21}$$

and

$$\int_\alpha^t \mathscr{G}(s)(s-t)^{n-3}\,\mathrm{d}s\geqslant 0,\quad \text{for } \alpha\leqslant s\leqslant t. \tag{22}$$

Also, if n is odd then the inequality in (21) remains the same while the inequality in (22) becomes reversed.

Since the function φ is n-convex, without loss of generality we can assume that φ is n-times differentiable and $\varphi^{(n)}\geqslant 0$ (see [7, p. 16 and p. 293]). Therefore we have

$$\int_\alpha^\beta\left(\int_t^\beta \mathscr{G}(s)(s-t)^{n-3}\,\mathrm{d}s\right)\varphi^{(n)}(t)\,\mathrm{d}t\leqslant 0. \tag{23}$$

Analogously, for even n we have

$$\int_\alpha^\beta\left(\int_\alpha^t \mathscr{G}(s)(s-t)^{n-3}\,\mathrm{d}s\right)\varphi^{(n)}(t)\,\mathrm{d}t\geqslant 0, \tag{24}$$

while for odd n we have reversed inequality in (24). Now, applying Lemma 2 we conclude (*i*), (*ii*) and (*iii*). □

REMARK 2. The right hand side of (19) can be written in the form

$$\int_{\alpha}^{\beta} \mathscr{G}(s)\left(\sum_{k=0}^{n-3} \frac{\varphi^{(k+2)}(\alpha)}{k!}(s-\alpha)^{k}\right) \mathrm{d}s.$$

Hence, in case $T_{n-3}(\varphi;\alpha,s)=\sum_{k=0}^{n-3}\frac{\varphi^{(k+2)}(\alpha)}{k!}(s-\alpha)^{k}\geqslant 0$ it is negative or equals zero and inequality (2) holds. Similarly, the right hand side of (20) can be written in the form

$$\int_{\alpha}^{\beta} \mathscr{G}(s)\left(\sum_{k=0}^{n-3} \frac{\varphi^{(k+2)}(\beta)}{k!}(s-\beta)^{k}\right) \mathrm{d}s.$$

Therefore, in case n is even and $T_{n-3}(\varphi;\beta,s)\geqslant 0$ inequality (2) holds, while in case n is odd and $T_{n-3}(\varphi;\beta,s)\leqslant 0$ reverse inequality in (2) holds.

THEOREM 2. *Let $g:[a,b]\to\mathbb{R}$ be a continuous and monotonic function, and $[\alpha,\beta]$ be an interval such that the image of g is a subset of $[\alpha,\beta]$. Let $\lambda:[a,b]\to\mathbb{R}$ be either continuous or of bounded variation satisfying (1), and $\varphi:[\alpha,\beta]\to\mathbb{R}$ a n-convex function such that $\varphi^{(n-1)}$ is absolutely continuous for some $n\geqslant 1$.*

(*i*) *Then the inequality*

$$\begin{aligned}&\varphi\left(\alpha+\beta-\frac{\int_a^b g(x)\,\mathrm{d}\lambda(x)}{\int_a^b \mathrm{d}\lambda(x)}\right)-\left(\varphi(\alpha)+\varphi(\beta)-\frac{\int_a^b \varphi(g(x))\,\mathrm{d}\lambda(x)}{\int_a^b \mathrm{d}\lambda(x)}\right)\\ &\leqslant\sum_{k=1}^{n-1}\frac{\varphi^{(k)}(\alpha)}{k!}\left[\left(\beta-\frac{\int_a^b g(x)\,\mathrm{d}\lambda(x)}{\int_a^b \mathrm{d}\lambda(x)}\right)^{k}-(\beta-\alpha)^{k}+\frac{\int_a^b (g(x)-\alpha)^{k}\,\mathrm{d}\lambda(x)}{\int_a^b \mathrm{d}\lambda(x)}\right]\end{aligned} \tag{25}$$

holds. Moreover, if $\varphi^{(k)}(\alpha)\geqslant 0$ for $k=2,3,\ldots,n-1$, then the right hand side of (25) is negative or equals zero and (2) holds.

(*ii*) *If n is even then the inequality*

$$\begin{aligned}&\varphi\left(\alpha+\beta-\frac{\int_a^b g(x)\,\mathrm{d}\lambda(x)}{\int_a^b \mathrm{d}\lambda(x)}\right)-\left(\varphi(\alpha)+\varphi(\beta)-\frac{\int_a^b \varphi(g(x))\,\mathrm{d}\lambda(x)}{\int_a^b \mathrm{d}\lambda(x)}\right)\\ &\leqslant\sum_{k=1}^{n-1}\frac{\varphi^{(k)}(\beta)}{k!}(-1)^{k}\left[\left(\frac{\int_a^b g(x)\mathrm{d}\lambda(x)}{\int_a^b \mathrm{d}\lambda(x)}-\alpha\right)^{k}-(\beta-\alpha)^{k}+\frac{\int_a^b (\beta-g(x))^{k}\mathrm{d}\lambda(x)}{\int_a^b \mathrm{d}\lambda(x)}\right]\end{aligned} \tag{26}$$

holds. Moreover, if $\varphi^{(k)}(\beta)\geqslant 0$ for $k=2,4,\ldots,n-2$ and $\varphi^{(k)}(\beta)\leqslant 0$ for $k=3,5,\ldots,n-1$, then the right hand side of (26) is negative or equals zero and (2) holds.

(*iii*) *If n is odd then the reversed inequality* (26) *holds. Moreover, if $\varphi^{(k)}(\beta) \leqslant 0$ for $k = 2,4,\ldots,n-1$ and $\varphi^{(k)}(\beta) \geqslant 0$ for $k = 3,5,\ldots,n-2$, then the right hand side of the reversed inequality* (26) *is nonnegative and reverse inequality in* (2) *holds.*

Proof. Since $\left((x-t)_+\right)^{n-1}$ is convex function and $(\alpha-t)_+ = 0$ and $(\beta-t)_+ = \beta - t$ for $t \in [\alpha,\beta]$, from Theorem A follows

$$\left(\left(\alpha+\beta-\frac{\int_a^b g(x)\,\mathrm{d}\lambda(x)}{\int_a^b \mathrm{d}\lambda(x)}-t\right)_+\right)^{n-1}-(\beta-t)^{n-1}+\frac{\int_a^b \left((g(x)-t)_+\right)^{n-1}\mathrm{d}\lambda(x)}{\int_a^b \mathrm{d}\lambda(x)} \leqslant 0.$$

Since the function φ is n-convex, without loss of generality we can assume that φ is n-times differentiable and $\varphi^{(n)} \geqslant 0$. Hence, applying Lemma 3 we conclude (i). Analogously, we conclude (ii) and (iii). $\square$

REMARK 3. In case $T_{n-1}(\varphi;\alpha,x)$ is convex function the right hand side of (25) is negative or equals zero and inequality (2) holds. In case $T_{n-1}(\varphi;\beta,x)$ is convex function and n is even the right hand side of (26) is negative or equals zero and (2) holds. In case $T_{n-1}(\varphi;\beta,x)$ is convex function and n is odd the right hand side of the reversed inequality (26) is nonnegative and reverse inequality in (2) holds.

3. Related results

For two Lebesgue integrable functions $f,h:[\alpha,\beta]\to\mathbb{R}$ the Čebyšev functional is given as

$$\Delta(f,h)=\frac{1}{\beta-\alpha}\int_\alpha^\beta f(t)h(t)\,\mathrm{d}t-\left(\frac{1}{\beta-\alpha}\int_\alpha^\beta f(t)\,\mathrm{d}t\right)\cdot\left(\frac{1}{\beta-\alpha}\int_\alpha^\beta h(t)\,\mathrm{d}t\right). \quad (27)$$

In paper [3] the following theorems were proved.

THEOREM B. *Let $f:[\alpha,\beta]\to\mathbb{R}$ be a Lebesgue integrable and $h:[\alpha,\beta]\to\mathbb{R}$ be an absolutely continuous function with $(\cdot-a)(b-\cdot)[h']^2 \in L[\alpha,\beta]$. Then the inequality*

$$|\Delta(f,h)| \leqslant \frac{1}{\sqrt{2}}[\Delta(f,f)]^{\frac{1}{2}}\frac{1}{\sqrt{\beta-\alpha}}\left(\int_\alpha^\beta (t-\alpha)(\beta-t)\left[h'(t)\right]^2\mathrm{d}t\right)^{\frac{1}{2}} \quad (28)$$

holds, where the constant $\frac{1}{\sqrt{2}}$ is the best possible.

THEOREM C. *Assume that $h:[\alpha,\beta]\to\mathbb{R}$ is monotonic nondecreasing on $[\alpha,\beta]$ and $f:[\alpha,\beta]\to\mathbb{R}$ is absolutely continuous with $f'\in L_\infty[\alpha,\beta]$. Then the inequality*

$$|\Delta(f,h)| \leqslant \frac{1}{2(\beta-\alpha)}\left\|f'\right\|_\infty\left(\int_\alpha^\beta (t-\alpha)(\beta-t)\,\mathrm{d}h(t)\right)^{\frac{1}{2}} \quad (29)$$

holds, where the constant $\frac{1}{2}$ *is the best possible.*

Proofs of the following theorems utilize the main ideas from the proofs of the similar theorems in [2] and [6], so we omit them here.

For a continuous and monotonic function $g:[a,b]\to\mathbb{R}$, an interval $[\alpha,\beta]$ such that the image of g is subset of $[\alpha,\beta]$, a function $\lambda:[a,b]\to\mathbb{R}$ either continuous or of bounded variation satisfying (1), and function $\mathscr{G}:[\alpha,\beta]\to\mathbb{R}$ defined by (6), let us denote

$$\mathscr{R}(t)=\int_t^\beta \mathscr{G}(s)(s-t)^{n-3}\,\mathrm{d}s, \tag{30}$$

$$\widetilde{\mathscr{R}}(t)=\int_\alpha^t \mathscr{G}(s)(s-t)^{n-3}\,\mathrm{d}s, \tag{31}$$

$$\mathscr{B}(t)=\left(\left(\alpha+\beta-\frac{\int_a^b g(x)\,\mathrm{d}\lambda(x)}{\int_a^b \mathrm{d}\lambda(x)}-t\right)_+\right)^{n-1}-(\beta-t)^{n-1}+\frac{\int_a^b\left((g(x)-t)_+\right)^{n-1}\mathrm{d}\lambda(x)}{\int_a^b \mathrm{d}\lambda(x)}, \tag{32}$$

and

$$\widetilde{\mathscr{B}}(t)=\left(\left(t-\alpha-\beta+\frac{\int_a^b g(x)\,\mathrm{d}\lambda(x)}{\int_a^b \mathrm{d}\lambda(x)}\right)_+\right)^{n-1}-(t-\alpha)^{n-1}+\frac{\int_a^b\left((t-g(x))_+\right)^{n-1}\mathrm{d}\lambda(x)}{\int_a^b \mathrm{d}\lambda(x)}. \tag{33}$$

Considering the function $\mathscr{R}$ we have the following identity in which the remainder $\mathscr{K}_n$ is estimated by using Theorem B.

THEOREM 3. *Let* $g:[a,b]\to\mathbb{R}$ *be a continuous and monotonic function, and* $[\alpha,\beta]$ *be an interval such that the image of* g *is a subset of* $[\alpha,\beta]$. *Let function* $\lambda:[a,b]\to\mathbb{R}$ *be either continuous or of bounded variation satisfying* (1). *Let function* $\varphi:[\alpha,\beta]\to\mathbb{R}$ *be such that* $\varphi^{(n)}$ *is absolutely continuous for some* $n\geqslant 3$ *with* $(\cdot-a)(b-\cdot)\left[\varphi^{(n+1)}\right]^2\in L[\alpha,\beta]$, *and let the functions* $\mathscr{G}$ *and* $\mathscr{R}$ *be defined by* (6) *and* (30), *respectively. Then the remainder* $\mathscr{K}_n$ *given in the following formula*

$$\begin{aligned}&\varphi\left(\alpha+\beta-\frac{\int_a^b g(x)\,\mathrm{d}\lambda(x)}{\int_a^b \mathrm{d}\lambda(x)}\right)-\left(\varphi(\alpha)+\varphi(\beta)-\frac{\int_a^b \varphi(g(x))\,\mathrm{d}\lambda(x)}{\int_a^b \mathrm{d}\lambda(x)}\right)\\&=\sum_{k=0}^{n-3}\frac{\varphi^{(k+2)}(\alpha)}{k!}\int_\alpha^\beta \mathscr{G}(s)(s-\alpha)^k\,\mathrm{d}s+\frac{\varphi^{(n-1)}(\beta)-\varphi^{(n-1)}(\alpha)}{(\beta-\alpha)(n-3)!}\int_\alpha^\beta \mathscr{R}(t)\,\mathrm{d}t\\&\quad+\mathscr{K}_n(\varphi;\alpha,\beta)\end{aligned} \tag{34}$$

satisfies the estimation

$$|\mathscr{K}_n(\varphi;\alpha,\beta)|\leqslant\frac{\sqrt{\beta-\alpha}}{\sqrt{2}(n-3)!}\left[\Delta(\mathscr{R},\mathscr{R})\right]^{\frac{1}{2}}\left|\int_\alpha^\beta(t-\alpha)(\beta-t)\left[\varphi^{(n+1)}(t)\right]^2\mathrm{d}t\right|^{\frac{1}{2}}. \tag{35}$$

Application of Theorem C gives the following Ostrowsky type inequality.

THEOREM 4. *Let $g:[a,b]\to\mathbb{R}$ be a continuous and monotonic function, and $[\alpha,\beta]$ be an interval such that the image of g is a subset of $[\alpha,\beta]$. Let function $\lambda:[a,b]\to\mathbb{R}$ be either continuous or of bounded variation satisfying (1), and let the functions $\mathscr{G}$ and $\mathscr{R}$ be defined by (6) and (30), respectively. Let function $\varphi:[\alpha,\beta]\to\mathbb{R}$ be such that $\varphi^{(n)}$ is absolutely continuous for some $n\geqslant 3$ with $\varphi^{(n+1)}\geqslant 0$ on $[\alpha,\beta]$. Then the remainder $\mathscr{K}_n$ in (34) satisfies the estimation*

$$|\mathscr{K}_n(\varphi;\alpha,\beta)|\leqslant\frac{1}{(n-3)!}\left\|\mathscr{R}'\right\|_\infty\left[\frac{\varphi^{(n-1)}(\beta)+\varphi^{(n-1)}(\alpha)}{2}-\frac{\varphi^{(n-2)}(\beta)-\varphi^{(n-2)}(\alpha)}{\beta-\alpha}\right]. \tag{36}$$

If the function $\varphi^{(n)}$ belongs to L_p, then we have the following theorem.

THEOREM 5. *Assume (p,q) is a pair of conjugate exponents, i.e. $1\leqslant p,q\leqslant\infty$, $\frac{1}{p}+\frac{1}{q}=1$. Let $g:[a,b]\to\mathbb{R}$ be a continuous and monotonic function, and $[\alpha,\beta]$ be an interval such that the image of g is a subset of $[\alpha,\beta]$. Let function $\lambda:[a,b]\to\mathbb{R}$ be either continuous or of bounded variation satisfying (1), and let the functions $\mathscr{G}$ and $\mathscr{R}$ be defined by (6) and (30), respectively. Let function $\varphi:[\alpha,\beta]\to\mathbb{R}$ be such that $\varphi^{(n-1)}$ is absolutely continuous and $\left|\varphi^{(n)}\right|^p$ is an R-integrable for some $n\geqslant 3$. Then*

$$\begin{aligned}&\left|\varphi\left(\alpha+\beta-\frac{\int_a^b g(x)\,\mathrm{d}\lambda(x)}{\int_a^b \mathrm{d}\lambda(x)}\right)-\left(\varphi(\alpha)+\varphi(\beta)-\frac{\int_a^b\varphi(g(x))\,\mathrm{d}\lambda(x)}{\int_a^b\mathrm{d}\lambda(x)}\right)\right.\\&\qquad\left.-\sum_{k=0}^{n-3}\frac{\varphi^{(k+2)}(\alpha)}{k!}\int_\alpha^\beta\mathscr{G}(s)(s-\alpha)^k\,\mathrm{d}s\right|\\&\leqslant\frac{1}{(n-3)!}\left(\int_\alpha^\beta|\mathscr{R}(t)|^q\,\mathrm{d}t\right)^{\frac{1}{q}}\left\|\varphi^{(n)}\right\|_p,\end{aligned} \tag{37}$$

where the constant on the right-hand side of (37) is sharp for $1<p\leqslant\infty$ and the best possible for $p=1$.

Analogous identities and Ostrowski type inequalities hold for the other three functions $\widetilde{\mathscr{R}}$, $\mathscr{B}$ and $\widetilde{\mathscr{B}}$.

REMARK 4. We can also obtain other related results, analogous to those in [2] and [6], using the main ideas from [4] and [5]. In particular, we can produce new families of n-exponentially convex and exponentially convex functions, applying functionals, constructed as differences of the right hand side and left hand side of some of the inequalities derived earlier, on some given families with the same property.

Acknowledgement. The author would like to thank the referee for his invaluable comments and insightful suggestions

REFERENCES

[1] J. BARIĆ, A. MATKOVIĆ, *Bounds for the normalized Jensen-Mercer functional*, J. Math. Inequal. **3** (4) (2009), 529–541.

[2] S. I. BUTT, K. A. KHAN, J. PEČARIĆ, *Popovicu type inequalities via Green function and generalized Montgomery identity*, Math. Inequal. Appl. **18** (4) (2015), 1519–1538.

[3] P. CERONE, S. S. DRAGOMIR, *Some new Ostrowski-type bounds for the Čebyšev functional and applications*, J. Math. Inequal. **8** (1) (2014), 159–170.

[4] J. JAKŠETIĆ, J. PEČARIĆ, *Exponential convexity method*, J. Convex Anal. **20** (1) (2013), 181–197.

[5] J. JAKŠETIĆ, J. PEČARIĆ, A. PERUŠIĆ, *Steffensen inequality, higher order convexity and exponential convexity*, Rend. Circ. Mat. Palermo. **63** (1) (2014), 109–127.

[6] M. ADIL KHAN, N. LATIF AND J. PEČARIĆ, *Generalization of majorization theorem*, J. Math. Inequal. **9** (3) (2015), 847–872.

[7] J. E. PEČARIĆ, F. PROSCHAN AND Y. L. TONG, *Convex Functions, Partial Orderings, and Statistical Applications*, Academic Press, Inc. 1992.

(Received April 11, 2016)

A. Matković
Faculty of Electrical Engineering
Mechanical Engineering and Naval Architecture
University of Split
Ruđera Boškovića 32, 21000 Split, Croatia
e-mail: anita.matkovic@fesb.hr

Mathematical
Inequalities
& Applications
Volume 19, Number 4 (2016), 1399–1412 doi:10.7153/mia-19-103

ASYMPTOTIC BEHAVIOR OF POWER MEANS

NEVEN ELEZOVIĆ AND LENKA MIHOKOVIĆ

(*Communicated by S. Varošanec*)

Abstract. We consider asymptotic behavior of classical n-variable means. General expansions of these means are known in the term of Bell polynomials. Here, simple recursive algorithms are derived. The obtained coefficients are used in analysis of some inequalities between means which include the first asymptotic term.

1. Introduction

In this paper we discuss relations between some classical means, using technique of asymptotic expansions. Let us fix the notation first. A letter M will denote any of means mentioned below. For n-tuples of positive real numbers, $\mathbf{a} = (a_1, a_2, \ldots, a_n)$ and $\mathbf{w} = (w_1, w_2, \ldots, w_n)$, $\sum_{i=1}^n w_i = 1$, let us denote weighted means:

$$Q(\mathbf{a}) = \sqrt{w_1 a_1^2 + w_2 a_2^2 + \ldots + w_n a_n^2}, \qquad \text{(quadratic mean)}$$

$$A(\mathbf{a}) = w_1 a_1 + w_2 a_2 + \ldots + w_n a_n, \qquad \text{(arithmetic mean)}$$

$$G(\mathbf{a}) = a_1^{w_1} a_2^{w_2} \cdots a_n^{w_n}, \qquad \text{(geometric mean)}$$

$$H(\mathbf{a}) = \frac{1}{\dfrac{w_1}{a_1} + \dfrac{w_2}{a_2} + \ldots + \dfrac{w_n}{a_n}}, \qquad \text{(harmonic mean)}$$

$$M_r(\mathbf{a}) = \left[w_1 a_1^r + w_2 a_2^r + \ldots + w_n a_n^r \right]^{1/r}, \quad r \neq 0. \qquad \text{(power mean)}$$

It is well known that it holds $Q \geqslant A \geqslant G \geqslant H$, and that all these means are contained in the family of power means, geometric mean corresponds to the limit case $r \to 0$.

The inequality between arithmetic and geometric mean holds for all positive values of its arguments. Note that the values of A and G can be quite different and the quotient $(A-G)/G$ can be arbitrary large.

What can be said if all arguments are taken from a subinterval I, far away from the origin? Then all variables are of the same order of magnitude and relative difference between means is in principle much smaller.

Mathematics subject classification (2010): 26E60, 41A60.
Keywords and phrases: Asymptotic expansion, power mean, asymptotic inequality.
This work has been fully supported by Croatian Science Foundation under the project 5435.

Paper MIA-19-103

For a fixed n-tuple $(a_1, a_2, \ldots, a_n)$ a shift by positive variable x will move this n-tuple into a bounded subinterval I^n. Let us denote by $x\mathbf{e}+\mathbf{a}$ the n-tuple with elements $(x+a_j)$, where $\mathbf{e}=(1,1,\ldots,1)$. The behaviour of $M(x\mathbf{e}+\mathbf{a})$ for large value of x will be essential in our analysis.

In the recent papers [2, 7, 8, 10], a similar problem was analyzed for two-variable means. Many of results obtained there can be translated in a setting of this paper, but here we discuss questions which are marginal in the case of two-parameter means.

Since for all x

$$A(x\mathbf{e}+\mathbf{a}) = x + A(\mathbf{a}),$$

the asymptotic expansion for this mean has only these two terms.

Since

$$\begin{aligned} H(x\mathbf{e}+\mathbf{a}) &= x \cdot \frac{1}{\sum\limits_{j=1}^{n} \frac{w_j}{1+a_j/x}} = x \cdot \frac{1}{\sum\limits_{j=1}^{n} w_j \left(1 - \frac{a_j}{x} + O(1/x^2)\right)} \\ &= x \cdot \frac{1}{1 - \frac{A(\mathbf{a})}{x} + O(1/x^2)} = x\left(1 + \frac{A(\mathbf{a})}{x} + O(1/x^2)\right) \\ &= x + A(\mathbf{a}) + O(1/x) \end{aligned}$$

we can conclude that it holds

$$H(x\mathbf{e}+\mathbf{a}) - x \to A(\mathbf{a}) \qquad \text{as } x \to \infty.$$

Since $H \leqslant G \leqslant A$, the same conclusion holds also for geometric mean. It will be shown that a power mean has the same property. Therefore, the asymptotic expansion of the function $x \mapsto M(x\mathbf{e}+\mathbf{a})$ should be of the form

$$M(x\mathbf{e}+\mathbf{a}) = x + A(\mathbf{a}) + \sum_{k=2}^{\infty} c_k(\mathbf{a}) x^{-k+1}$$

for any of means from the above-mentioned list. Here c_n, $n \in \mathbb{N}_0$, are homogenous polynomials of order n which can be expressed as a function of

$$m_k = w_1 a_1^k + w_2 a_2^k + \ldots + w_n a_n^k = M_k^k(\mathbf{a}).$$

Let us denote $m_0 = 1$.

The complete asymptotic expansion of power mean in terms of Bell polynomials was proved in [1]:

THEOREM. *For each $p \in \mathbb{R}$, the power means $M_p(x\mathbf{e}+\mathbf{a})$ possess the complete asymptotic expansion*

$$M_r(x\mathbf{e}+\mathbf{a}) = x + \sum_{k=0}^{\infty} c_k(\mathbf{a}) x^{-k}, \quad x \to \infty.$$

In the case $p \neq 0$ *the coefficients are given by*

$$c_k(r) = \frac{1}{(k+1)!}\sum_{j=1}^{k+1} j!\binom{1/r}{j}\mathbf{B}_{k+1,j}\left[i!\binom{r}{i}M_i^i(\mathbf{a})\right].$$

In case $p = 0$ *coefficients are given by*

$$c_k(0) = \frac{(-1)^{k+1}}{(k+1)!}\mathbf{Y}_{k+1}\left[-(i-1)!M_i^i(\mathbf{a})\right].$$

$\mathbf{B}_{m,j}[y_i] := \mathbf{B}_{m,j}(y_1,\ldots,y_{m-j+1})$ denotes partial Bell polynomials defined by

$$\frac{1}{j!}\left(\sum_{k=1}^{\infty} y_k\frac{t^k}{k!}\right)^j = \sum_{m=j}^{\infty}\mathbf{B}_{m,j}[y_i]\frac{t^m}{m!}, \quad j = 1,2,\ldots$$

and $\mathbf{Y}_m[y_i] = \mathbf{Y}_m(y_1,\ldots,y_n)$ are complete Bell polynomials defined by

$$\exp\left(\sum_{j=1}^{\infty} y_j\frac{t^j}{j!}\right) = 1 + \sum_{m=1}^{\infty}\mathbf{Y}_m[y_i]\frac{t^m}{m!}.$$

In this paper we derive an efficient recursive formula for such expansion and simplified verisons in the particular cases of the above-mentioned means. Our results are based on the using of the following lemmas about functional transformations of asymptotic series, see [3, 4, 8, 9].

LEMMA 1.1. *Let* $a_0 = 1$ *and* $g(x)$ *be a function with the asymptotic expansion*

$$g(x) \sim \sum_{n=0}^{\infty} a_n x^{-n}.$$

Then for all real p *it holds*

$$g(x)^p \sim \sum_{n=0}^{\infty} P_n(p)x^{-n},$$

where $P_0 = 1$ *and*

$$P_n(p) = \frac{1}{n}\sum_{k=1}^{n}[k(1+p)-n]a_k P_{n-k}(p).$$

Especially, for $p = -1$ *we obtain formula for the reciprocal value of an asymptotic series:*

$$\frac{1}{g(x)} \sim \sum_{n=0}^{\infty} R_n x^{-n},$$

where $R_0 = 1$ *and*

$$R_n = -\sum_{k=1}^{n} a_k R_{n-k}.$$

LEMMA 1.2. *Let functions $f(x)$ and $g(x)$ have the following asymptotic expansions ($a_0 \neq 0$, $b_0 \neq 0$) as $x \to \infty$:*

$$f(x) \sim \sum_{n=0}^{\infty} a_n x^{-n}, \qquad g(x) \sim \sum_{n=0}^{\infty} b_n x^{-n}.$$

Then the asymptotic expansion of their quotient $f(x)/g(x)$ reads as

$$\frac{f(x)}{g(x)} \sim \sum_{n=0}^{\infty} c_n x^{-n},$$

where coefficients c_n are defined by

$$c_n = \frac{1}{b_0}\left(a_n - \sum_{k=1}^{n} b_k c_{n-k}\right).$$

LEMMA 1.3. *Let*

$$g(x) = \sum_{n=1}^{\infty} a_n x^{-n}$$

be a given asymptotical expansion. Then the composition $\exp(g(x))$ has asymptotic expansion of the following form

$$\exp(g(x)) = \sum_{n=0}^{\infty} b_n x^{-n}$$

where $b_0 = 1$ and

$$b_n = \frac{1}{n}\sum_{k=1}^{n} k a_k b_{n-k}, \qquad n \geqslant 1.$$

This paper is organized as follows. In the next section an asymptotic expansion of power mean was found. Coefficients depending on a real parameter r are defined by recursive relation and some interesting properties are detected. As a consequence we obtained asymptotic expansions of some well known classical means. Section 3 begins with reminder of the results from our previous paper in which we studied inequalities related to bivariate means and continues with the discussion of the known inequalities related to n-variable classical means. In Section 4, we established some asymptotic inequalities covering arithmetic, geometric and harmonic means.

2. Power mean

The power mean can be written in a way

$$M_r(x\mathbf{e}+\mathbf{a}) = \left[\sum_{j=1}^{n} w_j (x+a_j)^r\right]^{1/r} = x\left[\sum_{j=1}^{n} w_j \sum_{k=0}^{\infty}\binom{r}{k} a_j^k x^{-k}\right]^{1/r}$$
$$= x\left[\sum_{k=0}^{\infty}\binom{r}{k}\frac{1}{n}\left(\sum_{j=1}^{n} w_j a_j^k\right)x^{-k}\right]^{1/r} = x\left[\sum_{k=0}^{\infty}\binom{r}{k} m_k x^{-k}\right]^{1/r}.$$

From Lemma 1.1 we get the following result.

THEOREM 2.1. *General power mean has the following asymptotic expansion*

$$M_r(x\mathbf{e}+\mathbf{a}) = x\cdot\sum_{k=0}^{\infty} c_k(r)x^{-k},$$

where $c_0 = 1$ *and*

$$c_k(r) = \frac{1}{k}\sum_{j=1}^{k}\left[j\left(1+\frac{1}{r}\right)-k\right]\binom{r}{j}m_j c_{k-j}(r), \quad k\in\mathbb{N}.$$

The first few coefficients are

$$\begin{aligned}
c_0(r) &= 1,\\
c_1(r) &= m_1,\\
c_2(r) &= -\tfrac{1}{2}(r-1)(m_1^2-m_2),\\
c_3(r) &= \tfrac{1}{6}(r-1)\big((2r-1)m_1^3-3(r-1)m_1m_2+(r-2)m_3\big),\\
c_4(r) &= -\tfrac{1}{24}(r-1)\big((3r-1)(2r-1)m_1^4-6(r-1)(2r-1)m_1^2m_2\\
&\qquad +3(r-1)^2m_2^2+4(r-2)(r-1)m_1m_3-(r-3)(r-2)m_4\big).
\end{aligned} \tag{2.1}$$

THEOREM 2.2. *Coefficients* c_k, $k\in\mathbb{N}_0$, *are homogeneous polynomials in variables* $(a_1,\dots,a_n)$ *and have the following form:*

$$c_k(r,\mathbf{a}) = \sum_{\substack{\alpha_1,\alpha_2,\dots,\alpha_k\geqslant 0\\ \alpha_1+2\alpha_2+\cdots+k\alpha_k=k}} q_{\alpha_1,\dots,\alpha_k}(r)m_1(\mathbf{a})^{\alpha_1}\cdots m_k(\mathbf{a})^{\alpha_k}, \tag{2.2}$$

where

$$\sum_{\substack{\alpha_1,\alpha_2,\dots,\alpha_k\geqslant 0\\ \alpha_1+2\alpha_2+\cdots+k\alpha_k=k}} q_{\alpha_1,\dots,\alpha_k}(r) = 0, \quad k\geqslant 2. \tag{2.3}$$

Proof. Using homogeneity of mean M_r, we have

$$\begin{aligned}
\lambda x\sum_{k=0}^{\infty} c_k(r,\mathbf{a})x^{-k} &= \lambda M_r(x\mathbf{e}+\mathbf{a}) = M_r(\lambda x\mathbf{e}+\lambda\mathbf{a})\\
&= \lambda x\sum_{k=0}^{\infty} c_k(r,\lambda\mathbf{a})(\lambda x)^{-k} = \lambda x\sum_{k=0}^{\infty}\lambda^{-k}c_k(r,\lambda\mathbf{a})x^{-k},
\end{aligned}$$

hence,

$$c_k(r,\lambda\mathbf{a}) = \lambda^k c_k(r,\mathbf{a}).$$

The form (2.2) can be deduced easily using induction. The property (2.3) follows from the special case:

$$\begin{aligned}
x+a = M_r(x\mathbf{e}+a\mathbf{e}) &= \sum_{k=0}^{\infty} c_k(r,a\mathbf{e})x^{-k}\\
&= \sum_{k=0}^{\infty} a^k\left(\sum_{\substack{\alpha_1,\alpha_2,\dots,\alpha_k\geqslant 0\\ \alpha_1+2\alpha_2+\cdots+k\alpha_k=k}} q_{\alpha_1,\dots,\alpha_k}(r)\right)x^{-k}. \quad \square
\end{aligned}$$

COROLLARY 2.3. *Harmonic mean has the following expansion*

$$H(x\mathbf{e}+\mathbf{a}) = x + m_1 + \sum_{k=2}^{\infty} c_k x^{-k+1},$$

where coefficients are given by $c_0 = 1$ *and*

$$c_k = \sum_{j=1}^{k} (-1)^{j-1} m_j c_{k-j}.$$

The first few coefficients are

$$\begin{aligned}
c_0 &= 1,\\
c_1 &= m_1,\\
c_2 &= m_1^2 - m_2,\\
c_3 &= m_1^3 - 2m_1m_2 + m_3,\\
c_4 &= m_1^4 - 3m_1^2m_2 + m_2^2 + 2m_1m_3 - m_4,\\
c_5 &= m_1^5 - 4m_1^3m_2 + 3m_1^2m_3 - 2m_2m_3 + 3m_1m_2^2 - 2m_1m_4 + m_5.
\end{aligned}$$

COROLLARY 2.4. *Quadratic mean has the following asymptotic expansion*

$$Q(x\mathbf{e}+\mathbf{a}) = x \cdot \sum_{k=0}^{\infty} c_k x^{-k},$$

where $c_0 = 1$, $c_1 = m_1$ *and*

$$c_k = \left(\frac{3}{k} - 2\right) m_1 c_{k-1} + \left(\frac{3}{k} - 1\right) m_2 c_{k-2}, \qquad k \geqslant 2.$$

The first few coefficients are

$$\begin{aligned}
c_0 &= 1,\\
c_1 &= m_1,\\
c_2 &= \tfrac{1}{2}(-m_1^2 + m_2),\\
c_3 &= \tfrac{1}{2} m_1 (m_1^2 - m_2),\\
c_4 &= \tfrac{1}{8}(-5m_1^4 + 6m_1^2m_2 - m_2^2),\\
c_5 &= \tfrac{1}{8} m_1 (7m_1^2 - 3m_2)(m_1^2 - m_2).
\end{aligned}$$

THEOREM 2.5. *Geometric mean has the following asymptotic expansion*

$$G(x\mathbf{e}+\mathbf{a}) = x \cdot \sum_{k=0}^{\infty} c_k x^{-k},$$

where $c_0 = 1$ *and*

$$c_k = \frac{1}{k} \sum_{j=1}^{k} (-1)^{j-1} m_j c_{k-j}, \quad k \geqslant 2.$$

Proof.

$$\log(G(x\mathbf{e}+\mathbf{a})) = \sum_{j=1}^{n} w_j \log(x+a_j) = \log x + \sum_{j=1}^{n} w_j \sum_{k=1}^{\infty} (-1)^{k-1} \frac{a_j^k}{x^k}$$
$$= \log x + \sum_{k=1}^{\infty} (-1)^{k-1} \frac{m_k}{x^k}.$$

Now the desired result follows from

$$G(x\mathbf{e}+\mathbf{a}) = x \exp\left(\sum_{k=1}^{\infty} (-1)^{k-1} \frac{m_k}{k} x^{-k} \right)$$

using Lemma 1.3. □

The first few coefficients are

$$\begin{aligned}
c_0 &= 1,\\
c_1 &= m_1,\\
c_2 &= \tfrac{1}{2}(m_1^2 - m_2),\\
c_3 &= \tfrac{1}{6}(m_1^3 - 3m_1m_2 + 2m_3),\\
c_4 &= \tfrac{1}{24}(m_1^4 - 6m_1^2m_2 + 3m_2^2 + 8m_1m_3 - 6m_4).
\end{aligned}$$

Notice that in the limit $r \to 0$ coefficients (2.1) become equal to coefficients in the asymptotic expansion of geometric mean.

2.1. Ratio of power means.

Abel and Ivan [1] proved that ratio

$$\frac{M_p(x\mathbf{e}+\mathbf{a}) - M_q(x\mathbf{e}+\mathbf{a})}{M_r(x\mathbf{e}+\mathbf{a}) - M_s(x\mathbf{e}+\mathbf{a})}$$

possesses an asymptotic expansion and the first few coefficients were written. Here, we give recursive formula for all coefficients. The proof of this theorem follows immediately using Lemma 1.2.

THEOREM 2.6. *For all real p,q,r,s with $r \neq s$, the asymptotic expansion of the ratio of power means is given by*

$$\frac{M_p(x\mathbf{e}+\mathbf{a}) - M_q(x\mathbf{e}+\mathbf{a})}{M_r(x\mathbf{e}+\mathbf{a}) - M_s(x\mathbf{e}+\mathbf{a})} \sim \sum_{k=0}^{\infty} c_k x^{-k},$$

where

$$c_k = \frac{1}{c_2(r) - c_2(s)} \left[(c_{k+2}(p) - c_{k+2}(q)) - \sum_{j=1}^{k} (c_{j+2}(r) - c_{j+2}(s)) c_{k-j} \right].$$

2.2. Gini mean

One natural generalization of a power mean is the Gini mean, defined as:

$$G_{p,q}(\mathbf{a}) = \begin{cases} \left[\frac{a_1^p+\cdots+a_n^p}{a_1^q+\cdots+a_n^q}\right]^{\frac{1}{p-q}}, & p \neq q, \\ \exp\left(\frac{\sum_{k=1}^n a_k^p \ln a_k}{\sum_{k=1}^n a_k^p}\right), & p = q \neq 0, \\ \sqrt{a_1 \cdots a_n}, & p = q = 0. \end{cases}$$

Using the same technique, one can prove the following theorem.

THEOREM 2.7. *The Gini mean has the following asymptotic expansion*

$$G_{p,q}(x\mathbf{e}+\mathbf{a}) = x \cdot \sum_{k=0}^{\infty} c_k x^{-k},$$

where $c_0 = 1$,

$$c_k = \frac{1}{k}\sum_{j=1}^{k}\left[j\left(1+\frac{1}{p-q}\right)-k\right] b_j c_{k-j}, \quad k \in \mathbb{N},$$

and

$$b_k = \binom{p}{k} m_k - \sum_{j=1}^{k}\binom{q}{j} m_j b_{k-j}, \quad k \geqslant 0.$$

The first few coefficients are

$$\begin{aligned}
c_0 &= 1, \\
c_1 &= m_1, \\
c_2 &= -\tfrac{1}{2}(p+q-1)(m_1^2-m_2), \\
c_3 &= \tfrac{1}{6}\big(((p+q-1)(2q-1)+2p(p-1))m_1^3 \\
&\qquad -3((p+q-1)(q-1)+p(p-1))m_1m_2 \\
&\qquad +((p+q-1)(q-2)+p(p-1))m_3\big), \\
c_4 &= \tfrac{1}{24}\big(-((p+q-1)(6q^2-5q+6p^2-9p+1)+4p(p-1))m_1^4 \\
&\qquad +6(p+q-1)(2q^2-3q+2p^2-3p+1)m_1^2m_2 \\
&\qquad -3(p+q-1)(p(p-2)+(q-1)^2)m_2^2 \\
&\qquad -4(p+q-2)(p(p-2)+(q-1)^2)m_1m_3 \\
&\qquad +(p+q-3)(q^2-3q+p^2-3p+2)m_4\big).
\end{aligned}$$

3. Inequalities between means

3.1. Bivariate means

Let us discuss briefly inequalities between bivariate means which follow from their asymptotic expansions. Let us denote

$$\alpha = \frac{t+s}{2}, \qquad \beta = \frac{t-s}{2}.$$

It is proved in [7] that

$$\begin{aligned}
Q(x+s,x+t) &= x+\alpha+\frac{\beta^2}{2x}-\frac{\alpha\beta^2}{2x^2}+\frac{\beta^2(4\alpha^2-\beta^2)}{8x^3}+o(x^{-3}),\\
A(x+s,x+t) &= x+\alpha,\\
I(x+s,x+t) &= x+\alpha-\frac{\beta^2}{6x}+\frac{\alpha\beta^2}{6x^2}-\frac{\beta^2(60\alpha^2+13\beta^2)}{360x^3}+o(x^{-3}),\\
L(x+s,x+t) &= x+\alpha-\frac{\beta^2}{3x}+\frac{\alpha\beta^2}{3x^2}-\frac{\beta^2(15\alpha^2+4\beta^2)}{45x^3}+o(x^{-3}),\\
G(x+s,x+t) &= x+\alpha-\frac{\beta^2}{2x}+\frac{\alpha\beta^2}{2x^2}-\frac{\beta^2(4\alpha^2+\beta^2)}{8x^3}+o(x^{-3}),\\
H(x+s,x+t) &= x+\alpha-\frac{\beta^2}{x}+\frac{\alpha\beta^2}{x^2}-\frac{\beta^2\alpha^3}{8x^3}+o(x^{-3}).
\end{aligned}$$

As a consequence, the folowing inequalities are proved.

THEOREM 3.1. ([7]) *Let $0<s<t$. Then for all $x>0$ we have*

$$Q(x+s,x+t) < x+\alpha+\frac{\beta^2}{2x}, \tag{3.1}$$

$$I(x+s,x+t) > x+\alpha-\frac{\beta^2}{6x}, \tag{3.2}$$

$$L(x+s,x+t) > x+\alpha-\frac{\beta^2}{3x}, \tag{3.3}$$

$$G(x+s,x+t) > x+\alpha-\frac{\beta^2}{2x}, \tag{3.4}$$

$$H(x+s,x+t) > x+\alpha-\frac{\beta^2}{x}. \tag{3.5}$$

In the case $s<t$, $s+t<0$ the inequalities (3.2)–(3.5) hold with opposite sign, for each $x>-s$.

Here, I is identric and L logarithmic mean. We shall interpret these inequalities in different settings, which is closer to the problem of comparison of power means.

3.2. n-variable means

Let $a_1 \leqslant a_2 \leqslant \ldots \leqslant a_n$ be fixed positive n-tuple. In the sequel we shall consider the equal-weight case, $w_1 = \ldots = w_n = \frac{1}{n}$. Then, all means are symmetric and as a consequence, all polynomials c_r are symmetric polynomials.

We are dealing with asymptotic behaviour of means, so it is natural to suppose that a_1 is sufficient large. Let us denote $b_i = a_i - x$, for each $1 \leqslant i \leqslant n$. Then

$$M(\mathbf{a}) = M(x\mathbf{e} + \mathbf{b})$$

and we can use asymptotic expansion for the function on the right. All means considered in this paper have asymptotic expansion of the form

$$M(\mathbf{a}) = x + A(\mathbf{b}) + \gamma_2 \frac{m_1^2 - m_2}{x} + \ldots$$

where γ_2 is a constant and both of the following terms behave well under translation:

$$x + A(\mathbf{b}) = A(\mathbf{a}),$$
$$m_2 - m_1^2 = \frac{1}{n^2} \sum_{1 \leqslant i < j \leqslant n} (b_i - b_j)^2 = \frac{1}{n^2} \sum_{1 \leqslant i < j \leqslant n} (a_i - a_j)^2.$$

It is natural to pose the following problem: find the best constants γ and δ such that for given two means F_1 and F_2, $F_1 \leqslant F_2$, we have

$$\frac{m_2 - m_1^2}{\gamma} < F_2(\mathbf{a}) - F_1(\mathbf{a}) < \frac{m_2 - m_1^2}{\delta}.$$

Some partial answers to this problem are already known.

For $0 \leqslant a_1 \leqslant \ldots \leqslant a_n$ the following inequalities for n-variable means A, G and H, with equal weights are given in [11, p. 39]:

$$\frac{1}{2n^2} \frac{1}{a_n} \sum_{1 \leqslant i < j \leqslant n} (a_i - a_j)^2 \leqslant A(\mathbf{a}) - G(\mathbf{a}) \leqslant \frac{1}{2n^2} \frac{1}{a_1} \sum_{1 \leqslant i < j \leqslant n} (a_i - a_j)^2 \tag{3.6}$$

and

$$\frac{1}{2n^2} \frac{a_1^3}{a_n^4} \sum_{1 \leqslant i < j \leqslant n} (a_i - a_j)^2 \leqslant G(\mathbf{a}) - H(\mathbf{a}) \leqslant \frac{1}{2n^2} \frac{a_n^3}{a_1^4} \sum_{1 \leqslant i < j \leqslant n} (a_i - a_j)^2.$$

Later on, Zhan, Xi and Chu [13] found improvements of these inequalities. If $n \geqslant 2$ and $0 < b \leqslant a_1 \leqslant \ldots \leqslant a_n \leqslant B$, then

$$\frac{\sum_{1 \leqslant i < j \leqslant n} (a_i - a_j)^2}{2n^2 B^{(n-1)/n} A^{1/n}(\mathbf{a})} \leqslant A(\mathbf{a}) - M_0(\mathbf{a}) \leqslant \frac{\sum_{1 \leqslant i < j \leqslant n} (a_i - a_j)^2}{2n^2 b^{(n-1)/n} A^{1/n}(\mathbf{a})}$$

and

$$\frac{b^{(n-1)/n}}{2n^2 B^{(2n-1)/n}} \sum_{1 \leqslant i < j \leqslant n} (a_i - a_j)^2 \leqslant M_0(\mathbf{a}) - M_{-1}(\mathbf{a}) \leqslant \frac{B^{(n-3)/n}}{2n^2 b^{(2n-3)/n}} \sum_{1 \leqslant i < j \leqslant n} (a_i - a_j)^2. \tag{3.7}$$

We shall show that these inequalities are not optimal. Let us begin with the A-G case for $n=2$. We have

$$\frac{a_1+a_2}{2}-\sqrt{a_1a_2}=\frac{(a_2-a_1)^2}{8\xi},$$

where

$$\xi=\left(\frac{\sqrt{a_1}+\sqrt{a_2}}{2}\right)^2.$$

Therefore, one has

$$\frac{(a_2-a_1)^2}{8\gamma}<A(\mathbf{a})-G(\mathbf{a})<\frac{(a_2-a_1)^2}{8\delta}$$

whenever $\delta<\xi<\gamma$. This is consistent with (3.6) since ξ given above is a mean and $a_1\leqslant\xi\leqslant a_n$.

Similar inequality is true also in the A-H inequality, where the critical value is $\xi=(a_1+a_2)/2$.

In the case of G-H inequality, the critical value is

$$\xi=\left(\frac{\sqrt{a_1}+\sqrt{a_2}}{2}\right)^2\left(\frac{a_1+a_2}{2}\right)\frac{1}{\sqrt{a_1a_2}}.$$

Therefore, at least for $n=2$ better simple bounds can be found, for example:

$$\delta=\frac{a_1+a_2}{2}<\xi<\frac{a_1+a_2}{2}\sqrt{\frac{a_2}{a_1}}=\gamma$$

which is better than bounds

$$\delta=\sqrt{a_1a_2},\qquad \gamma=a_2\sqrt{\frac{a_2}{a_1}}$$

which follow from (3.7).

4. Asymptotic inequalities

DEFINITION 4.1. Let $F(s,t)$ be any homogenous bivariate function such that

$$F(x+s,x+t)=c_k(t,s)x^{-k+1}+\mathcal{O}(x^{-k}).$$

If $c_k(s,t)>0$ for all s and t, we say that F is *asymptotically* greater than zero, and write

$$F\succ 0.$$

Asymptotic inequalities between means impose necessary conditions for the proper inequalities, see [4–7]. The sign of the first neglected coefficient is essential in such analysis. Let us describe the idea in the case of means G and H. It holds

$$G(x\mathbf{e}+\mathbf{b})-H(x\mathbf{e}+\mathbf{b})-\frac{m_2-m_1^2}{2x}=-\frac{1}{6x^2}(4m_3-9m_1m_2+5m_1^3)+o(x^{-2}).$$

In the general case, the sign of

$$\Delta(\mathbf{b})=4m_3-9m_1m_2+5m_1^3$$

depends on the number of variables n.

THEOREM 4.2. *Let $n\in\{1,2,3,4,5\}$. In the case $0\leqslant b_1\leqslant b_2\leqslant\ldots\leqslant b_n$ we have*

$$G(x\mathbf{e}+\mathbf{b})-H(x\mathbf{e}+\mathbf{b})-\frac{m_2-m_1^2}{2x}\prec 0. \tag{4.1}$$

In the case $b_1\leqslant b_2\leqslant\ldots\leqslant b_n\leqslant 0$ the opposite inequality holds in (4.1).

Proof. Let $0\leqslant b_1\leqslant\ldots\leqslant b_n$. According to Corollary 2.1. (1) from [12], inequality

$$\Delta(\mathbf{b})\geqslant 0$$

of degree $d=3$ holds for all $\mathbf{b}\in\mathbf{R}_+^n$ if and only if it holds for every $\mathbf{b}\in\mathbf{R}_+^n$ such that the number of non-zero distinct components of $\mathbf{b}$ is less or equal to $\max(\lfloor\frac{3}{2}\rfloor,1)=1$. Let us take

$$\mathbf{b}=(1,\ldots,1,0,\ldots,0) \tag{4.2}$$

which consists of k units and $n-k$ zeros. Since $0\leqslant\frac{k}{n}\leqslant\frac{4}{5}$ or $\frac{k}{n}=1$, it follows

$$\Delta(\mathbf{b})=5\frac{k^3}{n^3}-9\frac{k^2}{n^2}+4\frac{k}{n}=5\frac{k}{n}\left(\frac{k}{n}-\frac{4}{5}\right)\left(\frac{k}{n}-1\right)\geqslant 0. \quad \square$$

The positivity od Δ is not true for $n\geqslant 6$. Take $k<n$ such that $\frac{4}{5}<\frac{k}{n}$. This is possible for each $n\geqslant 6$. Then, for $\mathbf{b}$ as in (4.2) we have $\Delta(\mathbf{b})<0$. Hence, the inequality

$$G(x\mathbf{e}+\mathbf{b})-H(x\mathbf{e}+\mathbf{b})-\frac{m_2-m_1^2}{2x}\prec 0$$

cannot be true under conditions $0\leqslant b_1\leqslant\ldots\leqslant b_n$, for $n\geqslant 6$.

Similar conclusions also hold for other means.

THEOREM 4.3. *In the case $0\leqslant b_1\leqslant b_2\leqslant\ldots\leqslant b_n$ we have*

$$A(x\mathbf{e}+\mathbf{b})-G(x\mathbf{e}+\mathbf{b})-\frac{m_2-m_1^2}{2x}\succ 0,$$

$$A(x\mathbf{e}+\mathbf{b})-H(x\mathbf{e}+\mathbf{b})-\frac{m_2-m_1^2}{x}\succ 0,$$

$$Q(x\mathbf{e}+\mathbf{b})-H(x\mathbf{e}+\mathbf{b})-\frac{3(m_2-m_1^2)}{2x}\prec 0,$$
$$Q(x\mathbf{e}+\mathbf{b})-G(x\mathbf{e}+\mathbf{b})-\frac{m_2-m_1^2}{x}\succ 0,$$
$$Q(x\mathbf{e}+\mathbf{b})-A(x\mathbf{e}+\mathbf{b})-\frac{m_2-m_1^2}{x}\prec 0.$$

In the case $b_1\leqslant b_2\leqslant\ldots\leqslant b_n\leqslant 0$ *the opposite inequalities hold.*

Proof. The proof follows as in the previous theorem since it holds:

$$A(x\mathbf{e}+\mathbf{b})-G(x\mathbf{e}+\mathbf{b})-\frac{m_2-m_1^2}{2x}=\frac{m_1^3-3m_1m_2+2m_3}{6x^2}+\mathscr{O}(x^{-3}),$$
$$Q(x\mathbf{e}+\mathbf{b})-H(x\mathbf{e}+\mathbf{b})-\frac{3(m_2-m_1^2)}{2x}=-\frac{m_1^3-3m_1m_2+2m_3}{2x^2}+\mathscr{O}(x^{-3}),$$
$$Q(x\mathbf{e}+\mathbf{b})-G(x\mathbf{e}+\mathbf{b})-\frac{m_2-m_1^2}{x}=-\frac{m_1^3-m_3}{3x^2}+\mathscr{O}(x^{-3}),$$
$$Q(x\mathbf{e}+\mathbf{b})-A(x\mathbf{e}+\mathbf{b})-\frac{m_2-m_1^2}{x}=-\frac{m_1(m_2-m_1^2)}{2x^2}+\mathscr{O}(x^{-3}).\quad\square$$

Acknowledgement. Authors would like to thank the anonymous referee for valuable corrections and comments which improved this paper considerably.

REFERENCES

[1] U. ABEL, M. IVAN, *A complete asymptotic expansion of power means*, J. Math. Anal. Appl. **325**, 1 (2007), 554–559.

[2] T. BURIĆ, N. ELEZOVIĆ, *Asymptotic expansion of Arithmetic-Geometric mean*, J. Math. Inequal. **9**, 4 (2015), 1181–1190.

[3] C.-P. CHEN, N. ELEZOVIĆ, L. VUKŠIĆ, *Asymptotic formulae associated with the Wallis power function and digamma function*, J. Class. Anal. **2**, 2 (2013), 151–166.

[4] C.-P. CHEN, N. ELEZOVIĆ, L. VUKŠIĆ, *Asymptotic expansion of integral mean of polygamma functions*, Math. Inequal. Appl. **18**, 1 (2015), 255–266.

[5] N. ELEZOVIĆ, *Asymptotic inequalities and comparison of classical means*, J. Math. Inequal. **9**, 1 (2015), 177–196.

[6] N. ELEZOVIĆ, *Asymptotic expansions of gamma and related functions, binomial coefficients, inequalities and means*, J. Math. Inequal. **9**, 4 (2015), 1001–1054.

[7] N. ELEZOVIĆ, L. VUKŠIĆ, *Asymptotic expansions of bivariate classical means and related inequalities*, J. Math. Inequal. **8**, 4 (2014), 707–724.

[8] N. ELEZOVIĆ, L. VUKŠIĆ, *Asymptotic expansions and comparison of bivariate parameter means*, Math. Inequal. Appl. **17**, 4 (2014), 1225–1244.

[9] N. ELEZOVIĆ, L. VUKŠIĆ, *Asymptotic expansions of integral means and applications to the ratio of gamma functions*, Appl. Math. Comput. **235** (2014), 187–200.

[10] N. ELEZOVIĆ, L. VUKŠIĆ, *Neuman-Sandor means, asymptotic expansions and related inequalities*, J. Math. Inequal. **9**, 4 (2015), 1337–1348.

[11] D. S. MITRINOVIĆ, J. E. PEČARIĆ, A. M. FINK, *Classical and New Inequalities in Analysis*, Kluwer Academic Publishers, Dordrecht, 1993.
[12] V. TIMOFTE, *On the positivity of symmetric polynomial functions. Part I: General results*, J. Math. Anal. Appl. **284** (2003), 174–190.
[13] F. ZHANG, B.-Y. XI, Y.-M. CHU, *A new method to prove and find analytic inequalities*, Abstr. Appl. Anal. **2010**, Art. ID 128934, 19 pages.

(Received April 15, 2016)

Neven Elezović
Faculty of Electrical Engineering and Computing
University of Zagreb
Unska 3, 10000 Zagreb, Croatia
e-mail: neven.elez@fer.hr

Lenka Mihoković
Faculty of Electrical Engineering and Computing
University of Zagreb
Unska 3, 10000 Zagreb, Croatia
e-mail: lenka.mihokovic@fer.hr

Mathematical
Inequalities
& Applications
Volume 19, Number 4 (2016), 1413–1416 doi:10.7153/mia-19-104

ON SOME PROPERTIES OF STRICTLY CONVEX FUNCTIONS

WITOLD JARCZYK AND KAZIMIERZ NIKODEM

(*Communicated by S. Varošanec*)

Abstract. We prove that some careless modification of the definition of strong convexity leads to a condition which is equivalent to that one of strict convexity.

Given a convex subset D of a real linear space a function $f : D \to \mathbb{R}$ is called *convex* if

$$\bigwedge_{x,y\in D} \bigwedge_{t\in(0,1)} f(tx+(1-t)y) \leqslant tf(x)+(1-t)f(y)$$

and *strictly convex* if the above inequality is strict whenever $x \neq y$:

$$\bigwedge_{\substack{x,y\in D\\ x\neq y}} \bigwedge_{t\in(0,1)} f(tx+(1-t)y) < tf(x)+(1-t)f(y).$$

Replacing the signs " $\leqslant$ " and " $<$ " by " $\geqslant$ " and " $>$ " above we come to the notions of *concavity* and *strict concavity,* respectively. Clearly every strictly convex function is convex but the converse fails to be true: the function $\mathbb{R} \ni x \longmapsto x$ serves as an example.

If the considered space is endowed with a norm $\|\cdot\|$ we can introduce one notion related to the convexity more. Namely, a function $f : D \to \mathbb{R}$ is said to be *strongly convex with modulus* $c \in (0,+\infty)$ if

$$\bigwedge_{x,y\in D} \bigwedge_{t\in(0,1)} f(tx+(1-t)y) \leqslant tf(x)+(1-t)f(y) - ct(1-t)\|x-y\|^2.$$

We say that f is *strongly convex* if it is strongly convex with some positive modulus. Similarly we introduce the notion of *strong concavity*.

It seems that the notion of strong convexity was introduced by Polyak [6] in 1966. Strongly convex functions play an important role in optimization theory and mathematical economics. Many properties and applications of them can be found in the literature. Let us mention here the papers by Vial [8], Montrucchio [2], Jovanovič [1], Polovinkin [5]. Also the classical book [7] due to Roberts and Varberg contains some information on that notion. Finally let us mention the paper [4] by the second present author; that is a survey article entirely devoted to strongly convex functions.

Mathematics subject classification (2010): 26A51, 39B62.
Keywords and phrases: Strict convexity, strong convexity.

Paper MIA-19-104

Evidently every strongly convex function is strictly convex. However, the converse is generally not the case: the exponential function $\mathbb{R} \ni x \longmapsto \exp x$ is strictly convex but it is not strongly convex with any modulus $c \in (0,+\infty)$; as any two norms in $\mathbb{R}$ (endowed with the usual linear operations) are equivalent, the latter does not depend on the norm considered there.

The main aim of this note is to answer the following question: what can be said if we make a typical "student" mistake and formally change the order of quantifiers in the definition of strong convexity: namely, instead of the condition

$$\bigvee_{c\in(0,+\infty)} \bigwedge_{x,y\in D} \bigwedge_{t\in(0,1)} f(tx+(1-t)y) \leqslant tf(x)+(1-t)f(y)-ct(1-t)\|x-y\|^2$$

we consider a weaker one

$$\bigwedge_{x,y\in D} \bigvee_{c\in(0,+\infty)} \bigwedge_{t\in(0,1)} f(tx+(1-t)y) \leqslant tf(x)+(1-t)f(y)-ct(1-t)\|x-y\|^2. \quad (1)$$

We prove that, rather unexpectedly, the following result holds.

THEOREM. *Let D be a convex subset of a real normed space and let $f : D \to \mathbb{R}$. Then condition* (1) *holds if and only if f is strictly convex.*

Proof. Assume that the function f is strictly convex. To prove (1) fix points $x, y \in D$. Without loss of generality we may assume that $x \neq y$. It is well known that the function $F_{x,y} : [0,1] \to \mathbb{R}$, given by

$$F_{x,y}(t) = f(tx+(1-t)y),$$

is strictly convex (see for instance [3, Prop. 3.4.2]; the reader can also verify this fact via routine calculation). Define the function $G_{x,y} : [0,1] \to \mathbb{R}$ by

$$G_{x,y}(t) = tf(x)+(1-t)f(y)-f(tx+(1-t)y).$$

Then

$$G_{x,y}(t) = tf(x)+(1-t)f(y)-F_{x,y}(t), \qquad t \in [0,1],$$

so $G_{x,y}$ is strictly concave as the difference of an affine function and a strictly convex one. In what follows to simplify the notation write G instead of $G_{x,y}$. Observe that G is continuous, $G(0) = G(1) = 0$ and, by the strict convexity of f, we have $G(t) > 0$ for every $t \in (0,1)$.

For any $c \in (0,+\infty)$ define a function $R_c : (0,1) \to \mathbb{R}$ by

$$R_c(t) = ct(1-t)\|x-y\|^2.$$

To get (1) it is enough to prove the existence of a $c \in (0,+\infty)$ satisfying

$$R_c(t) \leqslant G(t), \quad t \in (0,1).$$

Suppose on the contrary that this is not the case. Then there exists a sequence $(t_n)_{n\in\mathbb{N}}$ of numbers from $(0,1)$ such that

$$R_{1/n}(t_n) > G(t_n), \quad n \in \mathbb{N}.$$

Choose a subsequence $(t_{k_n})_{n\in\mathbb{N}}$ of $(t_n)_{n\in\mathbb{N}}$ converging to a $t_0 \in [0,1]$. Then, since $t(1-t) \leqslant 1/4$ for all $t \in \mathbb{R}$, we have

$$G(t_{k_n}) < R_{1/k_n}(t_{k_n}) = \frac{1}{k_n} t_{k_n}(1-t_{k_n}) \|x-y\|^2 \leqslant \frac{\|x-y\|^2}{4k_n}$$

for each $n \in \mathbb{N}$. Therefore, by the continuity of G, we get $G(t_0) \leqslant 0$, and thus $G(t_0) = 0$, whence either $t_0 = 0$, or $t_0 = 1$. Assume, for instance, that $t_0 = 0$. Since $G(0) = 0 < G(t)$ for $t \in (0,1)$ and G is concave, it follows that G has a positive derivative at 0. On the other hand

$$\frac{G(t_{k_n})}{t_{k_n}} < \frac{R_{1/k_n}(t_{k_n})}{t_{k_n}} = \frac{\|x-y\|^2}{k_n}(1-t_{k_n}) < \frac{\|x-y\|^2}{k_n}, \quad n \in \mathbb{N},$$

whence

$$G'(0) = \lim_{n\to\infty} \frac{G(t_{k_n})}{t_{k_n}} \leqslant 0,$$

a contradiction. Consequently, condition (1) holds.

The converse implication is obvious. □

It turns out that if we additionally assume the continuity of a strictly convex function $f : D \to \mathbb{R}$, then also $c : D \times D \to (0,+\infty)$ provided by condition (1) can be chosen regular in a sense.

COROLLARY. *Let D be a convex subset of a real normed space and let $f : D \to \mathbb{R}$. If the function f is continuous and strictly convex, then there exists an upper semicontinuous function $c_0 : D \times D \setminus \Delta \to (0,+\infty)$, where $\Delta = \{(x,y) \in D \times D : x = y\}$, such that*

$$f(tx+(1-t)y) \leqslant tf(x) + (1-t)f(y) - c_0(x,y)t(1-t)\|x-y\|^2$$

for all $x,y \in D$ with $x \neq y$ and $t \in (0,1)$.

Proof. Since f is continuous it follows that for every $t \in (0,1)$ the function

$$D \times D \ni (x,y) \longmapsto G_{x,y}(t) = tf(x) + (1-t)f(y) - f(tx+(1-t)y)$$

is continuous. Now putting

$$c_0(x,y) := \inf\left\{ \frac{G_{x,y}(t)}{t(1-t)\|x-y\|^2} : t \in (0,1) \right\}$$

for each $x,y \in D$, $x \neq y$, we see that the function $c_0 : D \times D \setminus \Delta \to \mathbb{R}$ is upper semicontinuous.

On account of the Theorem, for all $x,y \in D$ with $x \neq y$, there exists a $c(x,y) \in (0,+\infty)$ such that

$$f(tx+(1-t)y) \leqslant tf(x)+(1-t)f(y)-c(x,y)t(1-t)\|x-y\|^2, \quad t \in (0,1),$$

that is

$$0 < c(x,y) \leqslant \frac{G_{x,y}(t)}{t(1-t)\|x-y\|^2}, \qquad t \in (0,1).$$

Thus

$$0 < c(x,y) \leqslant c_0(x,y) \leqslant \frac{G_{x,y}(t)}{t(1-t)\|x-y\|^2}, \qquad t \in (0,1),$$

whenever $x,y \in D$ and $x \neq y$, which proves that the function c_0 takes only positive values and satisfies the inequality stated in the assertion. $\square$

REFERENCES

[1] M. V. JOVANOVIČ, *A note on strongly convex and strongly quasi-convex functions*, Math. Notes **60** (1996), 778–779.

[2] L. MONTRUCCHIO, *Lipschitz continuous policy functions for strongly concave optimization problems*, J. Math. Econom. **16** (1987), 259–273.

[3] C. P. NICULESCU AND L.-E. PERSSON, *Convex Functions and their Applications. A Contemporary Approach*, CMS Books in Mathematics vol. 23, Springer-Verlag, New York, 2006.

[4] K. NIKODEM, *On strongly convex functions and related classes of functions*, in: T. M. Rassias (ed.) *Handbook of functional equations*, 365–405, Springer Optim. Appl. 95, Springer, New York, 2014.

[5] E. S. POLOVINKIN, *Strongly convex analysis*, Sb. Math. **187** (1996), 259–286.

[6] B. T. POLYAK, *Existence theorems and convergence of minimizing sequences in extremum problems with restrictions*, Sov. Math. Dokl. **7** (1966), 72–75.

[7] A. W. ROBERTS AND D. E. VARBERG, *Convex functions*, Academic Press, New York-London, 1973.

[8] J. P. VIAL, *Strong and weak convexity of sets and functions*, Math. Oper. Res. **8** (1983), 231–259.

(Received April 22, 2016)

Witold Jarczyk
Institute of Mathematics and Informatics
John Paul II Catholic University of Lublin
Konstantynów 1h, PL-20-708 Lublin, Poland
e-mail: wjarczyk@kul.lublin.pl
and
Faculty of Mathematics, Computer Science and Econometrics
University of Zielona Góra
Szafrana 4a, PL-65-516 Zielona Góra, Poland
e-mail: w.jarczyk@wmie.uz.zgora.pl

Kazimierz Nikodem
Department of Mathematics, University of Bielsko-Biała
Willowa 2, PL-43-309 Bielsko-Biała, Poland
e-mail: knikodem@ath.bielsko.pl

Mathematical
Inequalities
& Applications
Volume 19, Number 4 (2016), 1417–1427 doi:10.7153/mia-19-105

CHEBYSHEV–GRÜSS TYPE INEQUALITIES ON TIME SCALES VIA TWO LINEAR ISOTONIC FUNCTIONALS

LUDMILA NIKOLOVA AND SANJA VAROŠANEC

(*Communicated by K. Nikodem*)

Abstract. We give a generalization of the Chebyshev-Grüss inequality by using the concept of derivative on time scales combined with application of the Chebyshev inequality involving two linear isotonic functionals. This approach covers integral case, discrete case, results from fractional and quantum calculus.

1. Introduction and preliminaries

The well-known classical Chebyshev inequality for Riemann integrals states that if p, f and g are integrable real functions on $[a,b] \subset \mathbb{R}$, $p \geqslant 0$, and if f and g are similarly ordered, then

$$\int_a^b p(x)dx \int_a^b p(x)f(x)g(x)dx \geqslant \int_a^b p(x)f(x)dx \int_a^b p(x)g(x)dx. \tag{1}$$

If f and g are oppositely ordered then the reverse of the inequality in (1) is valid, [12, p. 239].

There is another inequality which is also joined with the name of Chebyshev. In literature it is known as the Chebyshev-Grüss inequality. It is an inequality which gives an upper bound for the absolute value of the Chebyshev difference involving the supremum of the first derivative of functions f and g. Precisely, the Chebyshev-Grüss inequality is the following result, [12, p. 297].

THEOREM 1. *Let $f, g : [a,b] \to \mathbb{R}$ be absolutely continuous functions. If $f', g' \in L_\infty[a,b]$, then*

$$\left| \frac{1}{b-a} \int_a^b f(x)g(x)dx - \left(\frac{1}{b-a} \int_a^b f(x)dx \right) \left(\frac{1}{b-a} \int_a^b g(x)dx \right) \right|$$
$$\leqslant \frac{1}{12}(b-a)^2 \|f'\|_\infty \cdot \|g'\|_\infty. \tag{2}$$

Mathematics subject classification (2010): 26E70, 26D15, 26A33.
Keywords and phrases: The Chebyshev-Grüss inequality, fractional integral operator, isotonic linear functional, time scale.

Paper MIA-19-105

The difference on the right hand side, under the sign of absolute value, is called the Chebyshev difference or the Chebyshev functional. Usually it is given in weighted version as follows

$$T(f,g,p) = \int_a^b p(x)dx \int_a^b p(x)f(x)g(x)dx - \int_a^b p(x)f(x)dx \int_a^b p(x)g(x)dx.$$

There exist a lot of estimations for T, but the most known is the Grüss inequality which states that

$$|T(f,g,p)| \leqslant \sqrt{T(f,f,p)T(g,g,p)}$$

and if numbers m,M,n,N are such that $m \leqslant f(x) \leqslant M$, $n \leqslant g(x) \leqslant N$ for all $x \in [a,b]$, then

$$|T(f,g,p)| \leqslant \frac{1}{4}(M-m)(N-n)\left(\int_a^b p(x)dx\right)^2.$$

Until now, Grüss type inequalities are investigated in different settings. There exist results involving sequences, functions, functionals, matrices, operators etc. In the paper [13] authors open new direction of investigation using two linear functionals instead of only one.

The lower bound for the Chebyshev difference is given in the following theorem, [14].

THEOREM 2. *Let f and g be two differentiable functions on $[a,b]$, monotonic in the same direction and $p \geqslant 0$. If $|f'(x)| \geqslant m \geqslant 0$ and $|g'(x)| \geqslant r \geqslant 0$ on $[a,b]$, then*

$$T(f,g,p) \geqslant mrT(x-a,x-a,p). \tag{3}$$

Since discrete versions of inequalities (1), (2) and (3) are also known, see for example [12, p. 240], [14], it is a natural question to ask: Does a general approach which covers integral and discrete versions of the above-mentioned inequalities exist? The answer is affirmative and it is given by a method of calculus on time scales. In this approach the Chebyshev inequality involving two isotonic linear functionals plays a main role. Let us mention some definitions and theorems related to that topic.

Let E be a non-empty set and L be a class of real-valued functions on E satisfying that a linear combination of functions from L is also in L and the function $\mathbf{1}$ belongs to L, ($\mathbf{1}(t) = 1$ for $t \in E$). A functional $A : L \to \mathbb{R}$ is called an isotonic linear functional if it is linear and has a property: if $f \in L$ is non-negative, then $A(f) \geqslant 0$.

The main subject in the Chebyshev inequality is a pair of similarly or oppositely ordered functions. We say that functions f and g on E are similarly ordered (or synchronous) if for each $x,y \in E$

$$(f(x)-f(y))(g(x)-g(y)) \geqslant 0.$$

If the reversed inequality holds, then we say that f and g are oppositely ordered or asynchronous.

Let us mention very recently proved result, [13].

THEOREM 3. (The Chebyshev inequality for two isotonic linear functionals) *Let A and B be two isotonic linear functionals on L and let f,g be two functions on E such that f, g, $fg \in L$. If f and g are similarly ordered functions, then*

$$A(fg)B(\mathbf{1})+A(\mathbf{1})B(fg) \geqslant A(f)B(g)+A(g)B(f). \tag{4}$$

If f and g are oppositely ordered functions, then the reverse inequality in (4) holds.

Putting $A=B$ in (4) and divided by 2 we get the Chebyshev inequality for one isotonic positive functional. As we see, in the Chebyshev-Grüss inequality the first derivative of functions f and g has appeared. In this paper we use a Δ-derivative of function defined on a time scale set $\mathbb{T}$. Let us mention here some definitions and properties from the time scale theory which we use in our research. For more details see [1, 5, 6, 11, 18].

A time scale $\mathbb{T}$ is an arbitrary non-empty closed subset of the set $\mathbb{R}$. A segment $[a,b]$ in $\mathbb{T}$ is defined as $[a,b]=\{t\in\mathbb{T} : a\leqslant t\leqslant b\}$. Other kinds of intervals are defined similarly. On $\mathbb{T}$ we define two jump operators ρ and σ:

$$\rho(t)=\sup\{s\in\mathbb{T} : s<t\},\quad \sigma(t)=\inf\{s\in\mathbb{T} : s>t\}.$$

A point $t\in\mathbb{T}$ is called left-dense if $t>\inf\mathbb{T}$ and $\rho(t)=t$, left scattered if $\rho(t)<t$, right-scattered if $\sigma(t)>t$ and right-dense if $t<\sup\mathbb{T}$ and $\sigma(t)=t$. If $\mathbb{T}$ has a left- scattered maximum M, then $\mathbb{T}^k=\mathbb{T}\backslash\{M\}$, otherwise $\mathbb{T}^k=\mathbb{T}$. If $\mathbb{T}$ has a right-scattered minimum m, then $\mathbb{T}_k=\mathbb{T}\backslash\{m\}$, otherwise $\mathbb{T}_k=\mathbb{T}$.

We say that $f:\mathbb{T}\to\mathbb{R}$ has the delta derivative $f^{\Delta}(t)\in\mathbb{R}$ at $t\in\mathbb{T}^k$ (provided it exists) if for each $\varepsilon>0$ there exists a neighborhood U of t in $\mathbb{T}$ such that

$$|f(\sigma(t))-f(s)-f^{\Delta}(t)(\sigma(t)-s)|\leqslant\varepsilon|\sigma(t)-s| \text{ for all } s\in U.$$

On a similar way we define the nabla derivative (∇-derivative) $f^{\nabla}(t)$, [18]. For $f:\mathbb{T}\to\mathbb{R}$ and $t\in\mathbb{T}_k$ the nabla derivative at t is the number (provided it exists) such that for each $\varepsilon>0$ there exists a neighborhood U of t in $\mathbb{T}$ such that

$$|f(\rho(t))-f(s)-f^{\nabla}(t)(\rho(t)-s)|\leqslant\varepsilon|\rho(t)-s| \text{ for all } s\in U.$$

A function $f:\mathbb{T}\to\mathbb{R}$ is called Δ-predifferentiable with region of differentiation D provided that the following conditions hold: f is continuous on $\mathbb{T}$; $D\subset\mathbb{T}^k$, $\mathbb{T}^k-D$ is countable and contains no right-scattered elements of $\mathbb{T}$ and f is Δ-differentiable at each $t\in D$, ([6, 11, 18]). Similarly, a ∇-predifferentiable function is defined in [18]. As a consequence of the mean-value theorem we have the following statement, ([6, 11]):

Let $f:\mathbb{T}\to\mathbb{R}$ be a Δ-predifferentiable function with region of differentiation D. If $f^{\Delta}(t)\geqslant 0$ for all $t\in D$, then f is increasing on $\mathbb{T}$.

Similar statement holds for ∇-predifferentiable f, [18].

The paper is organized in the following way. After this chapter with described motivation, definitions and useful properties, we follow with Chebyshev-Grüss type inequality involving two linear isotonic functionals in general settings - in time scales theory. The third section is devoted to results involving lower bounds for the Chebyshev difference and in the last chapter we give several examples.

2. Upper bound for the Chebyshev difference

As we say at the beginning of the paper we estimate a difference between two sides in the Chebyshev inequality for two functionals (4). For that difference we use the abbreviation $T(f,g)$, i.e.

$$T(f,g) = A(\mathbf{1})B(fg) + B(\mathbf{1})A(fg) - A(f)B(g) - A(g)B(f).$$

By linearity of functionals A and B we have that T is linear in each argument.

In this section, set E is a time scale $\mathbb{T}$ and L is a set of real functions defined on $\mathbb{T}$. This section is devoted to generalization of the classical Chebyshev-Grüss inequality (2). The main theorem is the following.

THEOREM 4. *Let A and B be two isotonic linear functionals on L. Let f, g, h_1, $h_2 : \mathbb{T} \to \mathbb{R}$ be Δ-predifferentiable functions with region of differentiation D, such that $T(f,g)$, $T(h_1,g)$, $T(f,h_2)$ and $T(h_1,h_2)$ exist and h_1^Δ, h_2^Δ don't change the sign, $h_1^\Delta(t)$, $h_2^\Delta(t) \neq 0$ for $t \in D$. Then*

$$|T(f,g)| \leqslant \left\| \frac{f^\Delta}{h_1^\Delta} \right\|_\infty \left\| \frac{g^\Delta}{h_2^\Delta} \right\|_\infty |T(h_1,h_2)|, \tag{5}$$

where $\left\| \frac{f^\Delta}{h_1^\Delta} \right\|_\infty = \sup_{t\in D} \left| \frac{f^\Delta(t)}{h_1^\Delta(t)} \right|$.

Proof. Let us suppose that $h_1^\Delta > 0$, $h_2^\Delta > 0$. Denote by

$$F = \left\| \frac{f^\Delta}{h_1^\Delta} \right\|_\infty, \quad G = \left\| \frac{g^\Delta}{h_2^\Delta} \right\|_\infty.$$

Without loss of generality we may assume that $F, G < \infty$. Then functions $Fh_1 + f$, $Gh_2 + g$ are increasing. Namely, from assumptions we get $\left| \frac{f^\Delta}{h_1^\Delta} \right| \leqslant F$, i.e. $-Fh_1^\Delta \leqslant f^\Delta \leqslant Fh_1^\Delta$, so $(Fh_1 + f)^\Delta \geqslant 0$ on D and $Fh_1 + f$ is increasing on $\mathbb{T}$. Similarly, we get $(Gh_2 + g)^\Delta \geqslant 0$. Using the same arguments we obtain that functions $Fh_1 - f$ and $Gh_2 - g$ are increasing.

So we can use the Chebyshev inequality for two functionals, i.e. we have

$$T(Fh_1 + f, Gh_2 + g) \geqslant 0 \text{ and } T(Fh_1 - f, Gh_2 - g) \geqslant 0.$$

By properties of T we get

$$T(f,g) + FG \cdot T(h_1,h_2) + F \cdot T(h_1,g) + G \cdot T(f,h_2) \geqslant 0$$
$$T(f,g) + FG \cdot T(h_1,h_2) - F \cdot T(h_1,g) - G \cdot T(f,h_2) \geqslant 0.$$

Adding these two inequalities we obtain

$$T(f,g) \geqslant -FG \cdot T(h_1,h_2).$$

Since $G = \left\| \frac{(-g)^\Delta}{h_2^\Delta} \right\|_\infty$ we can write $T(f,-g) \geqslant -FG \cdot T(h_1,h_2)$ and we get

$$T(f,g) \leqslant FG \cdot T(h_1,h_2).$$

Since h_1 and h_2 are similarly ordered, we have $T(h_1,h_2) \geqslant 0$, that means

$$|T(f,g)| \leqslant FG \cdot T(h_1,h_2) = FG \cdot |T(h_1,h_2)|,$$

which is in fact, inequality (5).

Suppose that $h_1^\Delta > 0$, $h_2^\Delta < 0$. We apply the above-proved result replacing the function h_2 by $-h_2$. Since

$$\left|\frac{g^\Delta(t)}{(-h_2)^\Delta(t)}\right| = \left|\frac{g^\Delta(t)}{h_2^\Delta(t)}\right|$$

we get (5) also in this case. The other two possibilities for h_1 and h_2 can be regarded in the same way. $\square$

In the previous theorem we can substitute Δ with ∇. Then the previous theorem becomes as the following:

THEOREM 5. *Let A and B be two isotonic linear functionals. Let f, g, h_1, $h_2 : \mathbb{T} \to \mathbb{R}$ be ∇-predifferentiable functions with region of differentiation D, such that $T(f,g)$, $T(h_1,g)$, $T(f,h_2)$ and $T(h_1,h_2)$ exist and h_1^∇, h_2^∇ don't change the sign, $h_1^\nabla(t)$, $h_2^\nabla(t) \neq 0$ for $t \in D$. Then*

$$|T(f,g)| \leqslant \left\|\frac{f^\nabla}{h_1^\nabla}\right\|_\infty \left\|\frac{g^\nabla}{h_2^\nabla}\right\|_\infty |T(h_1,h_2)|. \tag{6}$$

3. Additional results for bounds of $T(f,g)$

The following theorem is a generalization of (3). In fact this result gives us additional information about bounds for $T(f,g)$ together with the Chebyshev-Grüss inequality.

THEOREM 6. *Let A and B be two isotonic linear functionals. Let f, g, h_1, $h_2 : \mathbb{T} \to \mathbb{R}$ be Δ-predifferentiable functions with region of differentiation D, such that $T(f,g), T(f,h_2)$, $T(h_1,g)$ and $T(h_1,h_2)$ exist.*

(i) If $h_1^\Delta, h_2^\Delta \underset{(\leqslant)}{\geqslant} 0$ and if

$$\left(f^\Delta \underset{(\leqslant)}{\geqslant} mh_1^\Delta \text{ and } g^\Delta \underset{(\leqslant)}{\geqslant} rh_2^\Delta\right) \text{ or } \left(f^\Delta \underset{(\geqslant)}{\leqslant} -mh_1^\Delta \text{ and } g^\Delta \underset{(\geqslant)}{\leqslant} -rh_2^\Delta\right)$$

for some non-negative m, r, then

$$T(f,g) \geqslant mr \cdot T(h_1,h_2) \geqslant 0.$$

(ii) If $h_1^\Delta \underset{(\leqslant)}{\geqslant} 0$, $h_2^\Delta \underset{(\geqslant)}{\leqslant} 0$ and if

$$\left(f^\Delta \underset{(\leqslant)}{\geqslant} mh_1^\Delta \text{ and } g^\Delta \underset{(\geqslant)}{\leqslant} rh_2^\Delta\right) \text{ or } \left(f^\Delta \underset{(\geqslant)}{\leqslant} -mh_1^\Delta \text{ and } g^\Delta \underset{(\leqslant)}{\geqslant} -rh_2^\Delta\right)$$

for some $m, r \geqslant 0$, then

$$T(f,g) \leqslant mr \cdot T(h_1,h_2) \leqslant 0.$$

(iii) If $h_1^\Delta, h_2^\Delta \underset{(\leqslant)}{\geqslant} 0$ *and if*

$$\left(f^\Delta \underset{(\leqslant)}{\geqslant} mh_1^\Delta \text{ and } g^\Delta \underset{(\geqslant)}{\leqslant} -rh_2^\Delta\right) \text{ or } \left(f^\Delta \underset{(\geqslant)}{\leqslant} -mh_1^\Delta \text{ and } g^\Delta \underset{(\leqslant)}{\geqslant} rh_2^\Delta\right),$$

$m, r \geqslant 0$, *then*

$$T(f,g) \leqslant -mr \cdot T(h_1,h_2) \leqslant 0.$$

(iv) If $h_1^\Delta \underset{(\leqslant)}{\geqslant} 0$, $h_2^\Delta \underset{(\geqslant)}{\leqslant} 0$ *and if*

$$\left(f^\Delta \underset{(\leqslant)}{\geqslant} mh_1^\Delta \text{ and } g^\Delta \underset{(\leqslant)}{\geqslant} -rh_2^\Delta\right) \text{ or } \left(f^\Delta \underset{(\geqslant)}{\leqslant} -mh_1^\Delta \text{ and } g^\Delta \underset{(\geqslant)}{\leqslant} rh_2^\Delta\right),$$

$m, r \geqslant 0$, *then*

$$T(f,g) \geqslant -mr \cdot T(h_1,h_2) \geqslant 0.$$

Proof. Let us prove one case (among possible 16 cases) in details. Let $h_1^\Delta, h_2^\Delta \geqslant 0$ and $f^\Delta \geqslant mh_1^\Delta$, and $g^\Delta \geqslant rh_2^\Delta$. Considering Δ-derivatives of functions $f - mh_1$ and $g - rh_2$ we find that

$$(f - mh_1)^\Delta \geqslant 0 \text{ and } (g - rh_2)^\Delta \geqslant 0,$$

hence $f - mh_1$ and $g - rh_2$ are increasing. Furthermore, from assumption $f^\Delta \geqslant mh_1^\Delta \geqslant 0$ we conclude that f is increasing. Applying the Chebyshev inequality (4) on two increasing functions $f - mh_1$ and h_2 we get

$$T(f - mh_1, h_2) \geqslant 0, \text{ i.e. } T(f,h_2) \geqslant mT(h_1,h_2). \tag{7}$$

Similarly, applying the Chebyshev inequality for two functionals (4) on two increasing functions $g - rh_2$ and f we get

$$T(g - rh_2, f) \geqslant 0, \text{ i.e. } T(f,g) \geqslant rT(f,h_2). \tag{8}$$

From (7) and (8) we get

$$T(f,g) \geqslant rT(f,h_2) \geqslant mr \cdot T(h_1,h_2) \geqslant 0,$$

where the last inequality is true since h_1 and h_2 are increasing. Other cases are proved in a similar manner. □

COROLLARY 1. *Let A and B be isotonic linear functionals on L, and let $f, g : \mathbb{T} \to \mathbb{R}$ be Δ-predifferentiable functions with region of differentiation D such that $0 \leqslant m \leqslant g^\Delta(x) \leqslant M$ for $x \in D$.*

(i) If $f^\Delta \geqslant 0$, then

$$m \cdot T(f,e_1) \leqslant T(f,g) \leqslant M \cdot T(f,e_1), \tag{9}$$

where $e_1(x) = x$.

(ii) If $f^\Delta \leqslant 0$, then the reverse signs in the above inequality hold.

Proof. Putting in the previous theorem 6(i):

$$f = f, \quad g = g, \quad h_1 = f, \quad h_2 = e_1, \quad m = 1, \quad r = m$$

we get the first inequality in (9). The second inequality is a consequence of Theorem 4. Of course, this corollary can be proved directly applying the Chebyshev inequality on pairs of functions f and $g - me_1$, or f and $Me_1 - g$. □

REMARK 1. If in Theorem 6 and Corollary 1 we substitute Δ with ∇ we get corresponding results from ∇ calculus.

4. Applications

In this section we give applications of the previous theorems for some particular cases. Also, we list papers in which particular cases of results from Sections 2 and 3 appear.

4.1. Δ-integral

Let $a,b \in \mathbb{T}$ with $a<b$ and let A and B be Cauchy Δ-integrals of f, i.e. $A(f) = B(f) = \int_a^b w(x)f(x)\Delta x$, $w \geqslant 0$. Definition and properties of it are given in [5] and [11]. Using the fact that A is an isotonic linear functional (see [2]), and if assumptions of Theorem 4 are satisfied we get the following Chebyshev-Grüss inequality:

$$\begin{aligned}\left|\int_a^b w(x)\Delta x \int_a^b w(x)f(x)g(x)\Delta x - \int_a^b w(x)f(x)\Delta x \int_a^b w(x)g(x)\Delta x\right| \\ \leqslant \left\|\frac{f^\Delta}{h_1^\Delta}\right\|_\infty \left\|\frac{g^\Delta}{h_2^\Delta}\right\|_\infty \left|\int_a^b w(x)\Delta x \int_a^b w(x)h_1(x)h_2(x)\Delta x \right. \\ \left. - \int_a^b w(x)h_1(x)\Delta x \int_a^b w(x)h_2(x)\Delta x\right|. \end{aligned} \tag{10}$$

Let us mention that, in general, Theorem 4 gives us a result for two different linear functionals, so we can, for example, use integrals with different weights.

REMARK 2. In paper [16, Theorem 9] another version of the Chebyshev-Grüss inequality (10) is given. They used $h_1(t) = h_2(t) = t$ and it is proved via the generalized Montgomery identity.

Results of Theorem 6 and Corollary 1 for Δ-integral seem to be quite new.

4.2. ∇-integral

Let us define A as $A(f) = \int_a^b w(x)f(x)\nabla x = B(f)$. More about ∇-integral, especially about its properties and connections with the theory of linear functionals can be found in [2] and [5]. Applying Theorem 5 we get the following Chebyshev-Grüss inequality:

$$\begin{aligned}\left|\int_a^b w(x)\nabla x \int_a^b w(x)f(x)g(x)\nabla x - \int_a^b w(x)f(x)\nabla x \int_a^b w(x)g(x)\nabla x\right| \\ \leqslant \left\|\frac{f^\nabla}{h_1^\nabla}\right\|_\infty \left\|\frac{g^\nabla}{h_2^\nabla}\right\|_\infty \left|\int_a^b w(x)\nabla x \int_a^b w(x)h_1(x)h_2(x)\nabla x \right. \\ \left. - \int_a^b w(x)h_1(x)\nabla x \int_a^b w(x)h_2(x)\nabla x\right|, \end{aligned} \tag{11}$$

where f,g,h_1,h_2 satisfy assumptions of Theorem 5. We don't find any results of that type in literature and it seems new to us. Also, a ∇-analogue of Theorem 6 containts new results.

4.3. q-integral

Let $0<q<1$, $b>0$ and $\mathbb{T}=\{0\}\cup\{bq^n : n=0,1,2,\dots\}$. For a function $f:\mathbb{T}\to\mathbb{R}$ we have

$$f^{\nabla}(t)=\frac{f(qt)-f(t)}{(q-1)t},\quad t\neq 0,$$

and $f^{\nabla}(0)=\lim_{s\to 0}\frac{f(s)-f(0)}{s}$ if this limit exists. In q-calculus the number $f^{\nabla}(t)$ is usually noted as $D_q(f)(t)$ and called a q-derivative of a function f at a point t. The Jackson integral of f (or q-integral) is defined as

$$I_q(f)=\int_0^b f(x)d_q(x):=b(1-q)\sum_{n=0}^{\infty}q^n f(bq^n).$$

In particular case, when $h_1(x)=h_2(x)=x$, $A=B=I_q$ inequality (6) becomes

$$|bI_q(fg)-I_q(f)I_q(g)|\leqslant ||D_q(f)||\,||D_q(g)||\frac{qb^4}{(1+q+q^2)(1+q)^2},$$

with $||D_q(f)||=\sup_{t\in\mathbb{T}}|D_q(f)(t)|$.

In [20] one can find a similar result proved by the Montgomery identity, while in [17] an inequality of Chebyshev-Grüss type involving q-derivative and q-integral on a general interval $[a,b]$ is given. The proof of the last-mentioned result is based on the properties of Lipschitz functions.

4.4. Continuous case – isotonic functionals, the Riemann integral

If Δ-derivative coincides with classical derivative a result from Theorem 4 for one linear functional, i.e. a case $A=B$ is given in [15]. In that paper the proof is based on the Cauchy mean-value theorem. A case when $h_1=h_2=h$ is rediscovered in [10] but using different proof. In fact, that proof is based on the Chebyshev inequality and we use their idea in our proof of Theorem 4.

Furthermore, if $A(f)=B(f)=\int_a^b w(x)f(x)dx$, $w\geqslant 0$, then inequality (5) becomes:

$$\left|\int_a^b w(x)dx\int_a^b w(x)f(x)g(x)dx-\int_a^b w(x)f(x)dx\int_a^b w(x)g(x)dx\right| \tag{12}$$

$$\leqslant\left\|\frac{f'}{h_1'}\right\|_\infty\left\|\frac{g'}{h_2'}\right\|_\infty\left|\int_a^b w(x)dx\int_a^b w(x)h_1(x)h_2(x)dx-\int_a^b w(x)h_1(x)dx\int_a^b w(x)h_2(x)dx\right|,$$

where f,g,h_1,h_2 satisfy assumptions of Theorem 4 for this particular case. The case when $h_1(x)=h_2(x)=x$ is proved in [9]. For $w=1$ we get inequality (2).

Putting in Theorem 6(i): $A(f)=B(f)=\int_a^b w(t)f(t)dt$, $h_1(x)=h_2(x)=x-a$, f and g are two differentiable, monotonic functions in the same direction with $|f'(x)|\geqslant m$ and $|g'(x)|\geqslant r$ on $[a,b]$, then we get result from [14].

If $h_1(x)=x-a$, $h_2(x)=b-x$, f and g are two differentiable, monotonic functions in the opposite direction with $|f'(x)|\geqslant m$ and $|g'(x)|\geqslant r$ on $[a,b]$, then Theorem 6(ii) gives result from [14], also.

4.5. Continuous case – fractional integral operators

Let us consider a fractional hypergeometric operator $I_t^{\alpha,\beta,\eta,\mu}$ which covers several types of well-known fractional operators: the Riemann-Liouville fractional integral operator ($\beta=-\alpha,\ \eta=\mu=0$), the Erdélyi-Kober operator ($\beta=0,\mu=0$) and Saigo operator ($\mu=0$).

If $t>0,\ \alpha>\max\{0,-\beta-\mu\},\ \mu>-1,\ \beta-1<\eta<0$, then a fractional hypergeometric operator is defined as

$$A(f)=I_t^{\alpha,\beta,\eta,\mu}\{f\}:=\frac{t^{-\alpha-\beta-2\mu}}{\Gamma(\alpha)}\int_0^t\sigma^{\mu}(t-\sigma)_2^{\alpha-1}F_1\left(\alpha+\beta+\mu,-\eta,\alpha;1-\frac{\sigma}{t}\right)f(\sigma)\,d\sigma$$

where the function ${}_2F_1(a,b,c,t)=\sum_{n=0}^{\infty}\frac{(a)_n(b)_n}{(c)_n}\frac{t^n}{n!}$ is the Gaussian hypergeometric function and $(a)_n$ is the Pochhammer symbol: $(a)_n=a(a+1)\dots(a+n-1)$, $(a)_0=1$, [3]. A functional $A(f)=I_t^{\alpha,\beta,\eta,\mu}\{f(t)\}$ is isotonic linear, so we can write the Chebyshev-Grüss type inequality for fractional hypergeometric operators.

THEOREM 7. *Let $p,\ q,\ f,\ g,\ h_1,\ h_2$ be functions on $[0,\infty)$, $p,\ q\geqslant 0,\ f,\ g$ differentiable, $h_1,\ h_2$ differentiable, strictly monotonic in the same direction. Let $t>0,\ \alpha>\max\{0,-\beta-\mu\},\ \mu>-1,\ \beta-1<\eta<0,\ \gamma>\max\{0,-\delta-\nu\},\ \nu>-1,\ \delta-1<\zeta<0$.*

If $\left\|\frac{f'}{h_1'}\right\|_\infty,\left\|\frac{g'}{h_2'}\right\|_\infty<\infty$, then

$$\begin{aligned}&|I_t^{\alpha,\beta,\eta,\mu}\{p\}I_t^{\gamma,\delta,\zeta,\nu}\{qfg\}+I_t^{\alpha,\beta,\eta,\mu}\{pfg\}I_t^{\gamma,\delta,\zeta,\nu}\{q\}-I_t^{\alpha,\beta,\eta,\mu}\{pf\}I_t^{\gamma,\delta,\zeta,\nu}\{qg\}\\&-I_t^{\alpha,\beta,\eta,\mu}\{pg\}I_t^{\gamma,\delta,\zeta,\nu}\{qf\}|\\\leqslant&\left\|\frac{f'}{h_1'}\right\|_\infty\left\|\frac{g'}{h_2'}\right\|_\infty\Big|I_t^{\alpha,\beta,\eta,\mu}\{p\}I_t^{\gamma,\delta,\zeta,\nu}\{qh_1h_2\}+I_t^{\alpha,\beta,\eta,\mu}\{ph_1h_2\}I_t^{\gamma,\delta,\zeta,\nu}\{q\}\\&-I_t^{\alpha,\beta,\eta,\mu}\{ph_1\}I_t^{\gamma,\delta,\zeta,\nu}\{qh_2\}-I_t^{\alpha,\beta,\eta,\mu}\{ph_2\}I_t^{\gamma,\delta,\zeta,\nu}\{qh_1\}\Big|.\end{aligned}$$

Proof. It is a consequence of Theorem 4 for $A(f)=I_t^{\alpha,\beta,\eta,\mu}\{pf\}$ and $B(f)=I_t^{\gamma,\delta,\zeta,\nu}\{qf\}$. □

A particular case of Theorem 7 for two Riemann-Liouville fractional operators $A(f)=J^{\alpha}pf(t)$, $B(f)=J^{\beta}qf(t)$ and $h(t)=t$ is given in [8]. An analogue result for two Riemann-Liouville q-integrals can be find in [7]. Furthermore, the Chebyshev-Grüss type inequality for the Saigo q-integral operators is given in [19].

Some results of the third section also can be found in recent literature. For example, if A and B are the same non-weighted Riemann-Liouville fractional integrals, i.e. $A(f)=B(f)=J^{\alpha}f(t)$, then results from Corollary 1 are given in [4]. Results of the same Corollary but for one fractional hypergeometric operator are given in [3].

Here we give results for only one class of fractional integral operators, i.e. for fractional hypergeometric operators. Of course, analogue results, which are consequences of Theorems 4 and 6 and Corollary 1 hold for other types of fractional integral operators which have isotonic property, for example, for the Hadamard operator, for the Katugampola operator, the Agrawal integral operator etc.

4.6. Discrete case

Let $\mathbb{T} \subseteq \mathbb{N}$. Then functions f, g, h_1, h_2 become sequences $(f_k)_k$, $(g_k)_k$, $(h_{1k})_k$, $(h_{2k})_k$, and Δ-derivative becomes a difference Δ between two consecutive elements of a sequence, i.e. $\Delta a_k = a_{k+1} - a_k$. For this particular case a part (i) of Theorem 6 has the following form.

THEOREM 8. *Let $(p_k)_k$ and $(q_k)_k$ be non-negative n-tuples. If real n-tuples $(h_{1k})_k$, $(h_{2k})_k$ are monotonic in the same direction with property: $\Delta h_{ik} \neq 0$ for all $k = 1, \dots, n$, $i = 1, 2$, and if for some non-negative m, r*

$$\left(\frac{\Delta f_k}{\Delta h_{1k}} \geqslant m \text{ and } \frac{\Delta g_k}{\Delta h_{2k}} \geqslant r \right) \text{ or } \left(\frac{\Delta f_k}{\Delta h_{1k}} \leqslant -m \text{ and } \frac{\Delta g_k}{\Delta h_{2k}} \leqslant -r \right)$$

for $k = 1, \dots, n$, then

$$\sum p_k f_k g_k \sum q_k + \sum p_k \sum q_k f_k q_k - \sum p_k f_k \sum q_k g_k - \sum p_k g_k \sum q_k f_k$$
$$\geqslant mr \Big(\sum p_k h_{1k} h_{2k} \sum q_k + \sum p_k \sum q_k h_{1k} h_{2k} - \sum p_k h_{1k} \sum q_k h_{2k} - \sum p_k h_{2k} \sum q_k h_{1k} \Big).$$

The above result for same n-tuples p and q, $h_{1k} = h_{2k} = k$, and corresponding variant of Theorem 4 is given in [14]. Other parts of Theorem 6 can also be given in discrete form.

Acknowledgements. The research of the first author was partially supported by the Sofia University SRF under contract No 146/2015. The research of the second author was supported by Croatian Science Foundation under the project 5435.

REFERENCES

[1] R. AGARWAL, M. BOHNER, A. PETERSON, *Inequalities on time scales: A survey*, Math. Inequal. Appl., **4** (4) (2001), 535–557.

[2] M. ANWAR, R. BIBI, M. BOHNER, J. PEČARIĆ, *Integral inequalities on time scales via the theory of isotonic linear functionals*, Abstr. Appl. Anal. **2001** (2011) Art. ID: 483595, 1–16.

[3] D. BALEANU, S. D. PUROHIT, PRAVEEN AGARWAL, *On fractional integral inequalities involving hypergeometric operators*, Chin. J. Math. (N. Y.), Volume 2014 (2014), Article ID 609476.

[4] S. BELARBI, Z. DAHMANI, *On some new fractional integral inequalities*, JIPAM. J. Inequal. Pure Appl. Math., **10** (3) (2009), Art. 86.

[5] M. BOHNER, A. PETERSON, *Dynamic Equations on Time Scales: An Introduction with Applications*, Birkhäuser, Boston, 2001.

[6] M. BOHNER, G. GUSEINOV, A. PETERSON, *Introduction to the time scales calculus*, Chapter in book: *Advances in Dynamic Equations on Time Scales*, Birkhäuser, Boston, 2003, pp. 1–15, Eds: M. Bohner and A. Peterson.

[7] K. BRAHIM, S. TAF, *On some fractional q-integral inequalities*, Malaya Journal of Matematik, **3** (1) (2013), 21–26.

[8] Z. DAHMANI, *Some results associated with fractional integrals involving the extended Chebyshev functional*, Acta Univ. Apulensis Math. Inform., **27** (2011), 217–224.

[9] S. S. DRAGOMIR, *Some integral inequalities of Grüss type*, Indian J. Pure Appl. Math., **31** (4) (2000), 397–415.

[10] H. GONSKA, I. RAŞA AND M. RUSU, *Čebyšev-Grüss-type inequalities revisited*, Math. Slovaca, **63** (5) (2013), 1007–1024.

[11] G. SH. GUSEINOV, *Integration on time scales*, J. Math. Anal. Appl., **285** (1) (2003), 107–127.

[12] D. S. MITRINOVIĆ, J. E. PEČARIĆ AND A. M. FINK, *Classical and new Inequalities in Analysis*, Kluwer Academic Publishers, Dordrecht-Boston-London, 1993.

[13] L. NIKOLOVA, S. VAROŠANEC, *Chebyshev and Grüss type inequalities involving two linear functionals and applications*, Math. Inequal. Appl., **19** (1) (2016), 127–143.

[14] J. PEČARIĆ, *On the Ostrowski generalization of Čebyšev's inequality*, J. Math. Anal. Appl., **102** (2) (1984), 479–487.

[15] J. PEČARIĆ, S. S. DRAGOMIR AND J. SÁNDOR, *On some Grüss type inequalities for isotonic functionals*, Rad Hrvat. Akad. Znan. Umj. Mat. Znan., [467] 11 (1994), 41–47.

[16] M. Z. SARIKAYA, N. AKTAN, H. YILDIRIM, *On weighted Čebyšev-Grüss type inequalities on time scales*, J. Math. Inequal., **2** (2008), 185–195.

[17] J. TARIBOON, S. K. NTOUYAS, *Quantum integral inequalities on finite intervals*, J. Inequal. Appl., 2014, 2014:121.

[18] S. G. TOPAL, *Rolle's and generalized mean value theorems on time scales*, J. Difference Equ. Appl., **8** (4) (2002), 333–344.

[19] W. YANG, *Some new Chebyshev and Grüss-type integral inequalities for Saigo fractional integral operators and their q-analogues*, Filomat, **29** (6) (2015), 1269–1289.

[20] W. YANG, *On weighted q-Čebyšev-Grüss type inequalities*, Comput. Math. Appl., **61** (2011), 1342–1347.

(Received April 26, 2016)

Ludmila Nikolova
Department of Mathematics and Informatics
Sofia University
Sofia, Bulgaria
e-mail: ludmilan@fmi.uni-sofia.bg

Sanja Varošanec
Department of Mathematics, University of Zagreb
Zagreb, Croatia
e-mail: varosans@math.hr

Mathematical Inequalities & Applications
www.ele-math.com
mia@ele-math.com

Mathematical
Inequalities
& Applications
Volume 19, Number 4 (2016), 1429–1439 doi:10.7153/mia-19-106

GENERALIZED INTEGRAL INEQUALITIES FOR CONVEX FUNCTIONS

M. EMIN ÖZDEMIR AND ALPER EKINCI

(*Communicated by S. Varošanec*)

Abstract. In this paper, we prove some general inequalities for convex functions and give Ostrowski, Hadamard and Simpson type results for a special case of these inequalities.

1. Introduction

The function $f:[a,b]\to\mathbb{R}$, is said to be convex, if we have

$$f(tx+(1-t)y)\leqslant tf(x)+(1-t)f(y)$$

for all $x,y\in[a,b]$ and $t\in[0,1]$. For more information see the papers [3], [1], [2].

Let $f:I\subseteq\mathbb{R}\to\mathbb{R}$ be a convex function and let $a,b\in I$, with $a<b$. The following double inequality:

$$f\left(\frac{a+b}{2}\right)\leqslant\frac{1}{b-a}\int_a^b f(x)\,dx\leqslant\frac{f(a)+f(b)}{2}$$

is known in the literature as Hadamard's inequality.

In 1928 Ostrowski proved the following famous inequality:

THEOREM 1. *Let $f:[a,b]\to\mathbb{R}$ be continuous on $[a,b]$ and differentiable on (a,b) and its derivative $f':(a,b)\to\mathbb{R}$ be bounded on (a,b), that is, $\|f'\|_\infty:=\sup_{t\in(a,b)}|f'(x)|<\infty$. Then for any $x\in[a,b]$, the following inequality holds:*

$$\left|f(x)-\frac{1}{b-a}\int_a^b f(t)\,dt\right|\leqslant\left|\frac{1}{4}+\frac{\left(x-\frac{a+b}{2}\right)^2}{(b-a)^2}\right|(b-a)\|f'\|_\infty.$$

The inequality is sharp in the sense that the constant $1/4$ cannot be replaced by a smaller one. In the rest of this section we list known results which we will generalize in the following section.

Sarikaya et al. obtained following Simpson type inequalities in [5].

Mathematics subject classification (2010): 26D15, 26D10.
Keywords and phrases: Convex functions, Hermite-Hadamard inequality, Simpson's inequality, power-mean inequality, Ostrowski's inequality; Hölder's inequality.

Paper MIA-19-106

THEOREM 2. *Let $f : I \subseteq \mathbb{R} \to \mathbb{R}$ be a differential mapping on I^o such that $f' \in L_1[a,b]$, where $a,b \in I$ with $a < b$. If $|f'|$ is convex on $[a,b]$, then the following inequality holds:*

$$\left| \frac{1}{6}\left[f(a) + 4f\left(\frac{a+b}{2}\right) + f(b) \right] - \frac{1}{b-a}\int_a^b f(x)dx \right| \leqslant \frac{5(b-a)}{72}\left[|f'(a)| + |f'(b)| \right]. \tag{1}$$

THEOREM 3. *Let $f : I^o \subseteq \mathbb{R} \to \mathbb{R}$ be a differential mapping on I^o such that $f' \in L_1[a,b]$, where $a,b \in I$ with $a < b$. If $|f'|^q$ is convex on $[a,b]$, $q \geqslant 1$, then the following inequality holds:*

$$\begin{aligned} &\left| \frac{1}{6}\left[f(a) + 4f\left(\frac{a+b}{2}\right) + f(b) \right] - \frac{1}{b-a}\int_a^b f(u)du \right| \\ &\leqslant \frac{(b-a)}{72}(5)^{1-\frac{1}{q}} \left\{ \left[\frac{61|f'(b)|^q + 29|f'(a)|^q}{18} \right]^{\frac{1}{q}} \right. \\ &\quad \left. + \left[\frac{61|f'(a)|^q + 29|f'(b)|^q}{18} \right]^{\frac{1}{q}} \right\}. \end{aligned} \tag{2}$$

Estimation for the difference between the middle and the leftmost term in the Hadamard inequality was proved by Kirmaci in [8].

THEOREM 4. *Let $f : I^o \to \mathbb{R}$ be a differential mapping on I^o, $a,b \in I^o$ with $a < b$. If $|f'|$ is convex on $[a,b]$, then we have*

$$\left| \frac{1}{b-a}\int_a^b f(x)\,dx - f\left(\frac{a+b}{2}\right) \right| \leqslant \frac{b-a}{4}\left(\frac{|f'(a)| + |f'(b)|}{2} \right). \tag{3}$$

Similarly, bound for the difference between the middle and the right most term in the Hadamard inequality was considered by Dragomir and Agarwal in [7] and has the following forms.

THEOREM 5. *Let $f : I^o \subseteq \mathbb{R} \to \mathbb{R}$ be a differential mapping on I^o, $a,b \in I^o$ with $a < b$. If $|f'|$ is convex on $[a,b]$, then the following inequality holds:*

$$\begin{aligned} &\left| \frac{f(a)+f(b)}{2} - \frac{1}{b-a}\int_a^b f(x)dx \right| \\ &\leqslant \frac{(b-a)}{8}\left[|f'(a)| + |f'(b)| \right]. \end{aligned} \tag{4}$$

THEOREM 6. *Let $f : I^o \subseteq \mathbb{R} \to \mathbb{R}$ be a differential mapping on I^o, $a,b \in I^o$ with $a < b$ and let $p > 1$. If the new mapping $|f'|^{p/(p-1)}$ is convex on $[a,b]$, then the following inequality holds:*

$$\left| \frac{f(a)+f(b)}{2} - \frac{1}{b-a}\int_a^b f(x)dx \right| \tag{5}$$
$$\leqslant \frac{(b-a)}{2(p+1)^{1/p}} \left[\frac{|f'(a)|^{p/p-1} + |f'(b)|^{p/p-1}}{2} \right]^{(p-1)/p}.$$

In this paper we give inequalities involving m harmonic polynomials and a function f such that $\left|f^{(n)}\right|^q$ is convex for some $q \geqslant 1$ and $n \in \mathbb{N}$. After each general inequality we obtain a result related to particular case $n = 1$, $m = 2$ and point out that for some especial values of our variables h and c, these results become the known results given in the above text.

2. Main results

In the further text m and n are fixed integers, $\sigma := \{a = x_0 < x_1 < x_2 < ... < x_m = b\}$ is a division of an interval $[a,b]$ with $m+1$ nodes, $\sigma' := \{0 = s_0 < s_1 < ... < s_m = 1\}$ is a corresponding division of the interval $[0,1]$ connected with σ by relation $s_j = \frac{x_j - a}{b-a}$. Let $\{P_{jk}\}_{k\in\mathbb{N}}$, $j = 1,...,m$ be harmonic sequences of polynomials, i.e. $P'_{jk} = P_{j,k-1}$, $k \in \mathbb{N}$, $P_{j0} = 1$, $j = 1,...,m$. Let us define a kernel S_n as

$$S_n(t,\sigma) = \begin{cases} P_{1n}(t), & t \in [a,x_1] \\ P_{2n}(t), & t \in (x_1,x_2] \\ \quad\vdots & \\ P_{mn}(t), & t \in (x_{m-1},b]. \end{cases}$$

In paper [4] Pečarić and Varošanec gave the following identity for n-times differentiable function f on $[a,b]$:

$$(-1)^n \int_a^b S_n(x,\sigma) f^{(n)}(x)\,dx = \int_a^b f(t)\,dt + \sum_{k=1}^{n} (-1)^k \Big[P_{mk}(b) f^{(k-1)}(b) \tag{6}$$
$$+ \sum_{j=1}^{m-1} \left[P_{jk}(x_j) - P_{j+1,k}(x_j) \right] f^{(k-1)}(x_j) - P_{1k}(a) f^{(k-1)}(a) \Big].$$

For further applications of this identity see [4], [6].

Let us denote the right-hand side of the above identity by I_m. Using substitution

$x = tb + (1-t)a$ on the left handside of (6) we get

$$(-1)^n \int_a^b S_n(x,\sigma) f^{(n)}(x)\,dx$$
$$= (-1)^n (b-a) \int_0^1 S_n(tb+(1-t)a,\sigma) f^{(n)}(tb+(1-t)a)\,dt.$$

Using notation $C_n(t,\sigma') = (b-a) S_n(tb+(1-t)a)$ identity (6) becomes

$$(-1)^n \int_0^1 C_n(t,\sigma') f^{(n)}(tb+(1-t)a)\,dt = I_m. \tag{7}$$

Also, in the further text we use abbreviations $K_{jn}(t) = (b-a)P_{jn}(tb+(1-t)a)$, $j = 1,\ldots,m$, *i.e.*

$$C_n(t,\sigma') = \begin{cases} K_{1n}(t), & t \in [0,s_1] \\ K_{2n}(t), & t \in (s_1,s_2] \\ \quad\vdots & \\ K_{mn}(t), & t \in (s_{m-1},1]. \end{cases}$$

THEOREM 7. *Let $f : I \subseteq \mathbb{R} \to \mathbb{R}$ be an n-times differentiable function on I°, $a,b \in I^\circ$, $a<b$ and $\left|f^{(n)}\right|^q$ be convex on $[a,b]$ for some $q \geqslant 1$ such that $S_n(t,\sigma) f^{(n)}(t)$ is integrable on $[a,b]$. Then*

$$|I_m| \leqslant \sum_{j=1}^m \left(\int_{s_{j-1}}^{s_j} |K_{jn}(t)|\,dt \right)^{1-\frac{1}{q}} \left\{ \left|f^{(n)}(b)\right|^q \left(\int_{s_{j-1}}^{s_j} t\,|K_{jn}(t)|\,dt \right) \right. \tag{8}$$
$$\left. + \left|f^{(n)}(a)\right|^q \left(\int_{s_{j-1}}^{s_j} (1-t)\,|K_{jn}(t)|\,dt \right) \right\}^{\frac{1}{q}}.$$

Proof. Using (7) and the power-mean inequality for $q \geqslant 1$ we have

$$|I_m| \leqslant \int_0^1 \left|C_n(t,\sigma')\right| \left|f^{(n)}(tb+(1-t)a)\right| dt$$
$$= \sum_{j=1}^m \int_{s_{j-1}}^{s_j} |K_{jn}(t)| \left|f^{(n)}(tb+(1-t)a)\right| dt$$
$$\leqslant \sum_{j=1}^m \left(\int_{s_{j-1}}^{s_j} |K_{jn}(t)|\,dt \right)^{1-\frac{1}{q}} \left(\int_{s_{j-1}}^{s_j} |K_{jn}(t)| \left|f^{(n)}(tb+(1-t)a)\right|^q dt \right)^{\frac{1}{q}}.$$

Since $\left|f^{(n)}\right|^q$ is convex we have

$$\begin{aligned}
|I_m| &\leqslant \sum_{j=1}^{m}\left(\int_{s_{j-1}}^{s_j}\left|K_{jn}(t)\right|dt\right)^{1-\frac{1}{q}} \\
&\quad\times\left(\int_{s_{j-1}}^{s_j}\left|K_{jn}(t)\right|\left(t\left|f^{(n)}(b)\right|^q+(1-t)\left|f^{(n)}(a)\right|^q\right)dt\right)^{\frac{1}{q}} \\
&= \sum_{j=1}^{m}\left(\int_{s_{j-1}}^{s_j}\left|K_{jn}(t)\right|dt\right)^{1-\frac{1}{q}} \\
&\quad\times\left(\left|f^{(n)}(b)\right|^q\int_{s_{j-1}}^{s_j}t\left|K_{jn}(t)\right|dt+\left|f^{(n)}(a)\right|^q\int_{s_{j-1}}^{s_j}(1-t)\left|K_{jn}(t)\right|dt\right)^{\frac{1}{q}}.
\end{aligned}$$

So, we deduce the desired result. □

The case when $q=1$ is significant, so we write that result as the following corollary.

COROLLARY 1. *If f satisfies assumptions of Theorem 7 with $q=1$ which also means $\left|f^{(n)}\right|$ is convex on $[a,b]$, then*

$$|I_m| \leqslant \left|f^{(n)}(b)\right|\sum_{j=1}^{m}\int_{s_{j-1}}^{s_j}t\left|K_{jn}(t)\right|dt+\left|f^{(n)}(a)\right|\sum_{j=1}^{m}\int_{s_{j-1}}^{s_j}(1-t)\left|K_{jn}(t)\right|dt. \tag{9}$$

COROLLARY 2. *If f satisfies assumptions of Theorem 7 with $n=1$, $m=2$, then*

$$\begin{aligned}
&\left|h[f(a)+f(b)]+(1-2h)f(x)-\frac{1}{b-a}\int_a^b f(u)\,du\right| \qquad (10)\\
&\leqslant (b-a)\left\{\left(\frac{c^2}{2}-hc+h^2\right)^{1-\frac{1}{q}}\left[\lambda_1\left|f'(b)\right|^q+\lambda_2\left|f'(a)\right|^q\right]^{\frac{1}{q}}\right. \\
&\quad+\left(\frac{c^2+1}{2}-(c+h)(1-h)\right)^{1-\frac{1}{q}}\left[\lambda_3\left|f'(b)\right|^q+\lambda_4\left|f'(a)\right|^q\right]^{\frac{1}{q}},
\end{aligned}$$

where $x \in [a,b]$, $h \in \left[0, \frac{1}{2}\right]$, $c = \frac{x-a}{b-a}$ *such that* $h \leqslant c \leqslant 1-h$ *and*

$$\begin{aligned}
\lambda_1 &= \frac{1}{6}\left(2c^3 - 3c^2h + 2h^3\right) \\
\lambda_2 &= \frac{1}{6}\left(-6ch + 6h^2 - 2h^3 - 2c^3 + 3c^2 + 3c^2h\right) \\
\lambda_3 &= \frac{1}{6}\left(2c^3 + 3c^2h - 3c^2 - 2h^3 + 6h^2 - 3h + 1\right) \\
\lambda_4 &= \frac{1}{6}\left(2 - 2c^3 + 6c^2 - 3c^2h + 6ch - 6c + 2h^3 - 3h\right).
\end{aligned}$$

Proof. Let us consider a division $\sigma = \{a \leqslant x \leqslant b\}$ of an interval $[a,b]$. Let us define the kernel $S_1(t,\sigma)$ as

$$S_1(t,\sigma) = \begin{cases} P_{11}(t) = t - (1-h)a - hb, t \in [a,x] \\ P_{21}(t) = t - ha - (1-h)b, t \in (x,b] \end{cases}.$$

Polynomials P_{11} and P_{21} are obviously harmonic. Denote by $c := \frac{x-a}{b-a}$. Then we consider a corresponding division $\sigma' = \{0 \leqslant c \leqslant 1\}$ of the interval $[0,1]$ and the kernel $C_1(t,\sigma')$ is equal to

$$C_1(t,\sigma') = \begin{cases} K_{11}(t) = (b-a)^2(t-h), \quad t \in [0,c] \\ K_{21}(t) = (b-a)^2(t-1+h), t \in (c,1] \end{cases}.$$

Putting in Theorem 7 the kernel $C_1(t,\sigma')$ after simple calculation with taking into account the condition $h \leqslant c \leqslant 1-h$ that is,

$$\int_0^c |t-h|\,dt = \int_0^h (h-t)\,dt + \int_h^c (t-h)\,dt = \frac{c^2}{2} - ch + h^2$$

and

$$\int_c^1 |t-1+h|\,dt = \int_c^{1-h} (1-h-t)\,dt + \int_{1-h}^1 (t-1+h)\,dt = \frac{c^2+1}{2} - (c+h)(1-h),$$

we get the desired inequality. □

REMARK 1. If we set $h = \frac{1}{6}$ and $c = \frac{1}{2}$ in (10) we obtain inequality (2).

REMARK 2. For different selections of parameters h and c in (10) we obtain the following Ostrowski, Simpson and Hadamard type inequalities.

(i) For the case $q = 1$, $h = 0$ we have

$$\begin{aligned}
&\left| f(x) - \frac{1}{b-a}\int_a^b f(u)\,du \right| \\
&\leqslant \frac{b-a}{6}\left[\left(1 - 3c^2 + 4c^3\right)\left|f'(b)\right| + \left(2 - 6c + 9c^2 - 4c^3\right)\left|f'(a)\right|\right]
\end{aligned}$$

which is an Ostowski type inequality. Furthermore, if $c=\frac{1}{2}$ we get inequality (3).

(ii) For the case $q=1,\ h=\frac{1}{6}$ we obtain the following Simpson type inequality

$$\left|\frac{1}{6}\left[f(a)+4f(x)+f(b)\right]-\frac{1}{b-a}\int_a^b f(u)\,du\right|$$
$$\leqslant\frac{(b-a)}{6}\left[\left(\frac{2}{3}-3c^2+4c^3\right)\left|f'(b)\right|+\left(\frac{5}{3}-6c+9c^2-4c^3\right)\left|f'(a)\right|\right]$$

which for $c=\frac{1}{2}$ collapses to inequality (1).

(iii) If $q=1,\ h=c=\frac{1}{2}$ we obtain the following Hadamard type inequality (4).

THEOREM 8. *Let $f:I\subseteq\mathbb{R}\to\mathbb{R}$ be an n-times differentiable mapping on I°, $a,b\in I^\circ,\ a<b$, and $\left|f^{(n)}\right|^q$ is convex on $[a,b]$ for some $q>1,\ S_n(t,\sigma)f^{(n)}(t)$ is integrable on $[a,b]$. Then the following inequality holds:*

$$|I_m|\leqslant\left(\sum_{j=1}^{m}\int_{s_{j-1}}^{s_j}\left|K_{jn}(t)\right|^p dt\right)^{\frac{1}{p}}\left(\frac{\left|f^{(n)}(a)\right|^q+\left|f^{(n)}(b)\right|^q}{2}\right)^{\frac{1}{q}},\tag{11}$$

where $\frac{1}{p}+\frac{1}{q}=1$.

Proof. From (7) and property of modulus we have

$$|I_m|=\left|\int_0^1 C_n\left(t,\sigma'\right)f^{(n)}(tb+(1-t)a)\,dt\right|$$
$$\leqslant\int_0^1\left|C_n\left(t,\sigma'\right)f^{(n)}(tb+(1-t)a)\right|dt.$$

By using Hölder inequality we have

$$\left|\int_0^1 C_n\left(t,\sigma'\right)f^{(n)}(tb+(1-t)a)\,dt\right|$$
$$\leqslant\left(\int_0^1\left|C_n\left(t,\sigma'\right)\right|^p dt\right)^{\frac{1}{p}}\left(\int_0^1\left|f^{(n)}(tb+(1-t)a)\right|^q dt\right)^{\frac{1}{q}}.$$

Since $\left|f^{(n)}\right|^q$ is convex, by Hadamard inequality we get

$$\int_0^1 \left|f^{(n)}(tb+(1-t)a)\right|^q dt \leqslant \frac{\left|f^{(n)}(a)\right|^q + \left|f^{(n)}(b)\right|^q}{2}.$$

Also we have

$$\int_0^1 \left|C_n(t,\sigma')\right|^p dt = \sum_{j=1}^{m} \int_{s_{j-1}}^{s_j} \left|K_{jn}(t)\right|^p dt.$$

By combining these we deduce the desired result. □

COROLLARY 3. *If f satisfies assumptions of Theorem 8 with $n=1$, $m=2$, then*

$$\left|h[f(a)+f(b)]+(1-2h)f(x)-\frac{1}{b-a}\int_a^b f(u)\,du\right| \tag{12}$$

$$\leqslant (b-a)\left(\frac{2h^{1+p}+(c-h)^{1+p}+(1-c-h)^{1+p}}{1+p}\right)^{\frac{1}{p}}\left(\frac{|f'(a)|^q+|f'(b)|^q}{2}\right)^{\frac{1}{q}},$$

where $x\in[a,b]$, $h\in\left[0,\frac{1}{2}\right]$, $c=\frac{x-a}{b-a}$ such that $h\leqslant c\leqslant 1-h$.

Proof. Putting in Theorem 8 the kernel $C_1(t,\sigma')$ defined as in the proof of Corollary 2, after simple calculation we get desired inequality. □

REMARK 3. For different selections of the parameters h and c in (12) we obtain the following Ostrowski, Hadamard and Simpson type inequalities

(i) For the case $h=0$ we have

$$\left|f(x)-\frac{1}{b-a}\int_a^b f(u)du\right| \leqslant (b-a)\left(\frac{c^{1+p}+(1-c)^{1+p}}{1+p}\right)^{\frac{1}{p}}\left(\frac{|f'(a)|^q+|f'(b)|^q}{2}\right)^{\frac{1}{q}}.$$

(ii) For the case $h=\frac{1}{2}$ and $c=\frac{1}{2}$ we obtain (5).

(iii) For $h=\frac{1}{6}$ and $c=\frac{1}{2}$ we have

$$\left|\frac{1}{6}\left[f(a)+4f\left(\frac{a+b}{2}\right)+f(b)\right]-\frac{1}{b-a}\int_a^b f(u)du\right|$$

$$\leqslant \frac{(b-a)}{6}\left(\frac{2^{1+p}+1}{3(p+1)}\right)^{\frac{1}{p}}\left(\frac{|f'(a)|^q+|f'(b)|^q}{2}\right)^{\frac{1}{q}}.$$

THEOREM 9. *Let $f : I \subseteq \mathbb{R} \to \mathbb{R}$ be an n-times differentiable mapping on I°, $a,b \in I^\circ$, $a < b$, and $\left|f^{(n)}\right|^q$ is convex on $[a,b]$ for some $q > 1$, $S_n(t,\sigma) f^{(n)}(t)$ is integrable on $[a,b]$. Then the following inequality holds:*

$$|I_m| \leqslant \sum_{j=1}^{m} \left(\int_{s_{j-1}}^{s_j} \left|K_{jn}(t)\right|^p dt \right)^{\frac{1}{p}} \left(\frac{\left|f^{(n)}(x_j)\right|^q + \left|f^{(n)}(x_{j-1})\right|^q}{2} \right)^{\frac{1}{q}}, \tag{13}$$

where $\frac{1}{p} + \frac{1}{q} = 1$.

Proof. By using (7), property of modulus and Hölder Inequality we have

$$\begin{aligned} |I_m| &\leqslant \int_0^1 \left| C_n(t,\sigma') f^{(n)}(tb + (1-t)a) \right| dt. \\ &\leqslant \sum_{j=1}^{m} \int_{s_{j-1}}^{s_j} \left| K_{jn}(t) f^{(n)}(tb + (1-t)a) \right| dt \\ &\leqslant \sum_{j=1}^{m} \left(\int_{s_{j-1}}^{s_j} \left|K_{jn}(t)\right|^p dt \right)^{\frac{1}{p}} \left(\int_{s_{j-1}}^{s_j} \left| f^{(n)}(tb + (1-t)a) \right|^q dt \right)^{\frac{1}{q}}. \end{aligned}$$

Since $\left|f^{(n)}\right|^q$ is convex, by using Hadamard inequality we get

$$\int_{s_{j-1}}^{s_j} \left| f^{(n)}(tb + (1-t)a) \right|^q dt \leqslant \frac{\left|f^{(n)}(x_j)\right|^q + \left|f^{(n)}(x_{j-1})\right|^q}{2}.$$

So, this implies (13). □

COROLLARY 4. *If f satisfies assumptions of Theorem 8 with $n = 1$, $m = 2$, then*

$$\begin{aligned} &\left| h[f(a) + f(b)] + (1-2h) f(x) - \frac{1}{b-a} \int_a^b f(u)\, du \right| \\ &\leqslant (b-a) \left\{ \left(\frac{h^{1+p} + (c-h)^{1+p}}{1+p} \right)^{\frac{1}{p}} \left(\frac{|f'(a)|^q + |f'(x)|^q}{2} \right)^{\frac{1}{q}} \right. \\ &\quad \left. + \left(\frac{h^{1+p} + (1-c-h)^{1+p}}{1+p} \right)^{\frac{1}{p}} \left(\frac{|f'(b)|^q + |f'(x)|^q}{2} \right)^{\frac{1}{q}} \right\}, \end{aligned} \tag{14}$$

where $x \in [a,b]$, $h \in \left[0, \frac{1}{2}\right]$, $c = \frac{x-a}{b-a}$ such that $h \leqslant c \leqslant 1-h$.

Proof. Putting in Theorem 9 the kernel $C_n(t,\sigma')$ defined as in the proof of Corollary 2, after simple calculation we get desired inequality. □

REMARK 4. For different selections of the parameters h and c in (14) we obtain the following Ostrowski, Hadamard and Simpson type inequalities

(i) For the case $h=0$ we have

$$\begin{aligned}&\left|f(x)-\frac{1}{b-a}\int_a^b f(u)du\right|\\ &\leqslant (b-a)\left\{\left(\frac{c^{1+p}}{1+p}\right)^{\frac{1}{p}}\left(\frac{|f'(a)|^q+|f'(x)|^q}{2}\right)^{\frac{1}{q}}\right.\\ &\quad\left.+\left(\frac{(1-c)^{1+p}}{1+p}\right)^{\frac{1}{p}}\left(\frac{|f'(b)|^q+|f'(x)|^q}{2}\right)^{\frac{1}{q}}\right\}.\end{aligned}$$

(ii) For the case $h=\frac{1}{2}$ and $c=\frac{1}{2}$ we get the following inequality

$$\begin{aligned}&\left|\frac{f(a)+f(b)}{2}-\frac{1}{b-a}\int_a^b f(u)du\right|\\ &\leqslant \frac{(b-a)}{2}\left(\frac{1}{2(1+p)}\right)^{\frac{1}{p}}\left\{\left(\frac{|f'(a)|^q+\left|f'\left(\frac{a+b}{2}\right)\right|^q}{2}\right)^{\frac{1}{q}}\right.\\ &\quad\left.+\left(\frac{|f'(b)|^q+\left|f'\left(\frac{a+b}{2}\right)\right|^q}{2}\right)^{\frac{1}{q}}\right\}.\end{aligned}$$

(iii) For $h=\frac{1}{6}$ and $c=\frac{1}{2}$ we have the following Simpson type inequality

$$\begin{aligned}&\left|\frac{1}{6}\left[f(a)+4f(\frac{a+b}{2})+f(b)\right]-\frac{1}{b-a}\int_a^b f(u)du\right|\\ &\leqslant \frac{(b-a)}{6}\left(\frac{2^{1+p}+1}{6(p+1)}\right)^{\frac{1}{p}}\left\{\left(\frac{|f'(a)|^q+\left|f'\left(\frac{a+b}{2}\right)\right|^q}{2}\right)^{\frac{1}{q}}\right.\\ &\quad\left.+\left(\frac{|f'(b)|^q+\left|f'\left(\frac{a+b}{2}\right)\right|^q}{2}\right)^{\frac{1}{q}}\right\}.\end{aligned}$$

REFERENCES

[1] B. G. PACHPATTE, *On some inequalities for convex functions*, RGMIA Research Report Collection **6**, E (1) (2003).

[2] G. H. TOADER, *On a generalization of the convexity*, Mathematica **30**, 53 (1988), 83–87.

[3] H. KAVURMACI, M. AVCI AND M. E. ÖZDEMIR, *New inequalities of Hermite-Hadamard type for convex functions with applications*, Journal of Inequalities and Applications **86**, 1 (2011).

[4] J. PEČARIĆ, S. VAROŠANEC, *Harmonic polynomials and generalization of Ostrowski inequality with Applications in Numerical Integration*, Nonlinear Analysis Series A: Theory, Methods and Applications **47**, 1 (2011), 2365–2374.

[5] M. Z. SARIKAYA, E. SET AND M. E. ÖZDEMIR, *On new inequalities of Simpson type for convex functions*, RGMIA Research Report Collection **13**, 2 (2) (2010).

[6] S. KOVAČ, J. PEČARIĆ, *Weighted version of general integral formula of Euler type*, Math. Inequal. Appl. **13**, 3 (2010), 579–599.

[7] S. S. DRAGOMIR, R. P. AGARWAL, *Two inequalities for differentiable mappings and applications*, Applied Mathematics Letters **11**, 5 (1998), 91–95.

[8] U. S. KIRMACI, *Inequalities for differentiable mappings and applications to special means of real numbers and to midpoint formula*, Appl. Math. Comp. **147**, 1 (2004), 137–146.

(Received January 16, 2016)

M. Emin Özdemir
Uludag University, Education Faculty
Bursa, Turkey
e-mail: eminozdemir@uludag.edu.tr

Alper Ekinci
Ağrı İbrahim Çeçen University
Faculty of Science and Letters
Department of Mathematics
04100 Ağrı, Turkey
e-mail: alperekinci@hotmail.com

Mathematical Inequalities & Applications
www.ele-math.com
mia@ele-math.com

CONTENTS